International Inline Skater Hockey Federation

Official Rule Book

2026 / 2027

V2026.1.0/2025-11-24

Changes are being displayed using the colour blue.

Copyright © 2008 - 2026 by the International Inline Skater Hockey Federation (hereinafter IISHF). All rights reserved.

The IISHF Official Rule Book applies to all IISHF Competitions and international games.

No part of this publication may be reproduced in the English language or translated and reproduced in any other language or transmitted in any form or by any means electronically or mechanically including photocopying, recording, or any information storage and retrieval system, without the prior permission in writing from the International Inline Skater Hockey Federation.

Images are by courtesy of Kreativpix (Christoph Stock, kreativpix.de) and Canpro-Sport (Helmut Sachse, www.canpro-sport.de). Country flags are by courtesy of www.freeflagicons.com under their personal license.

PARTICIPATION

Inline Skater Hockey is a contact sport and any players participating in any game and using the approved equipment to play, do so at their own risk. Clubs and teams must ensure that all players are fully aware of the risk involved.

IISHF Rules Committee

Table of Contents

1. **The Pitch** **6**
   - 1.1 Surface 6
   - 1.2 Dimensions 6
   - 1.3 Boards 6
   - 1.4 Pitch Markings 7
   - 1.5 Players' Benches 8
   - 1.6 Penalty Box 8
   - 1.7 Timekeepers' Box 9
   - 1.8 Pitch Lighting 9
   - 1.9 Dressing Rooms 9
   - 1.10 Smoking at the venue 9
   - 1.11 Music at the venue 9
   - 1.12 Exemptions 10

2. **Match Equipment** **11**
   - 2.1 Goals 11
   - 2.2 Ball 11
   - 2.3 Match Equipment 12

3. **Officials** **14**
   - 3.1 Appointment of Officials 14
   - 3.2 Tournament Director 14
   - 3.3 Referees 15
   - 3.4 Kit check referee 16
   - 3.5 Timekeepers 17
   - 3.6 Penalty Box Stewards 17
   - 3.7 Goal Judge 18
   - 3.8 Proper Authorities 18
   - 3.9 Abuse of Officials 18

4. **Teams** **20**
   - 4.1 Age Limits 20
   - 4.2 Team Composition 21
   - 4.3 Team Captain 22

5. **Players' Dress and Equipment** **24**
   - 5.1 Equipment 24
   - 5.2 Players' Skates 24
   - 5.3 Players' Stick 24
   - 5.4 Players' Protective Equipment 25
   - 5.5 Players' Helmet 26
   - 5.6 Players' Face Mask and Visor 26
   - 5.7 Players' Gloves 26
   - 5.8 Shoulder and Chest Protector 26
   - 5.9 Mouth Guard 27
   - 5.10 Goalkeepers' Equipment 27
   - 5.11 Goalkeepers' Skates 27

5.12 Goalkeeper's Stick 27
5.13 Goalkeepers' Protective Equipment 27
5.14 Goalkeeper's Helmet and Face Mask 28
5.15 Goalkeepers' Leg Guards 28
5.16 Goalkeepers' Blocking Glove 29
5.17 Goalkeeper's Catching Glove 29
5.18 Dangerous Objects 29
5.19 Uniforms 30

6. **Starting the Game** **31**
6.1 Starting Ends 31
6.2 Face-Off 31
6.3 Pre-game warm-up 31

7. **Penalties** **32**
7.1 Free-hit 33
7.2 Minor penalty (2 minutes) 33
7.3 Bench penalty (2 minutes) 33
7.4 Major penalty (5 minutes) 33
7.5 Misconduct penalty (10 minutes; yellow card) 34
7.6 Game Misconduct penalty (GM; yellow and red card) 34
7.7 Match penalty (MP; red card) 35
7.8 Gross Match penalty (GMP; black card) 35
7.9 Goalkeepers Penalty Procedure 36
7.10 Outstanding Time Penalties 36
7.11 Leaving the Penalty Box 37
7.12 Penalty Shot 37
7.13 Delayed Penalties 39
7.14 Sequence of Penalties 40
7.15 Calling of Penalties 40

8. **Playing Rules** **42**
8.1 Ball out of Sight and Illegal Ball 42
8.2 Ball touching referee 42
8.3 Ball unplayable 42
8.4 Broken Sticks 42
8.5 Dropped Sticks 43
8.6 Throwing of Sticks 43
8.7 Early Termination of the Game 43
8.8 Playing while lying on the pitch 43
8.9 Fair Body Contact 43
8.10 Foul Play 44
8.11 Goalkeeper's Rights 53
8.12 Goal Crease 54
8.13 Scoring a Goal 54
8.14 Handling the Ball 55
8.15 Leaving the players Bench / Entering the pitch 56
8.16 Misconduct 56
8.17 Team Official / Bench Official 57

8.18 Refusing to Start 57
8.19 Restart after Stoppage 58
8.20 Substitution of Players 58
8.21 Winner of a Game 59
8.22 Tied Games and Tied Places 59
8.23 Penalty Shootout 60
8.24 Time 60
8.25 Time-Out 62
8.26 Whistle 62
8.27 Injuries 62
8.28 Blood 63
8.29 Doping and Alcohol 63

9. **Referee Signals** **64**
9.1 Referee Signals 64

10. **Foul Play – Overview** **68**
10.1 Fouls and their Penalization 68

11. **Penalty Codes – Overview** **70**
11.1 Foul Play 70
11.2 Substituting players 70
11.3 Delaying of game 70
11.4 Goalkeeper offences 70
11.5 Misconduct 71
11.6 Penalty box offences 71
11.7 Equipment related offences 71

12. **Your Notes** **72**

1. The Pitch

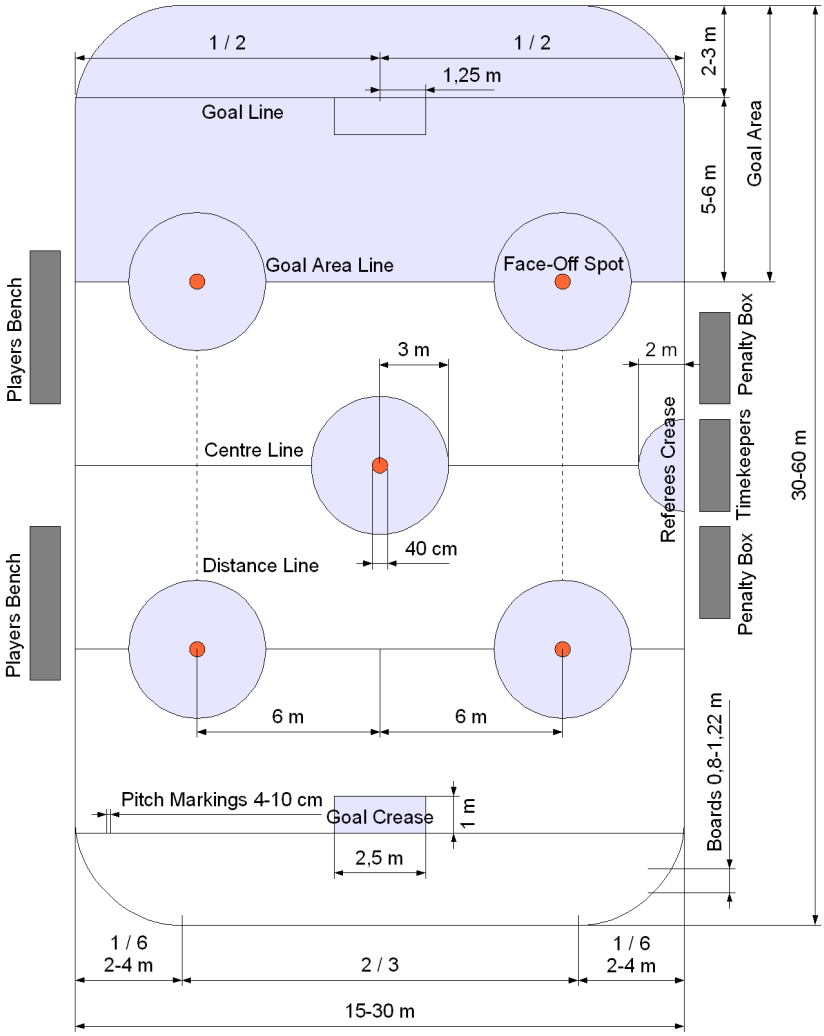

1.1 Surface

1.1.1 The surface of the pitch must be of wood, tiles, tarmac, or such other substances as may be approved by the IISHF and be flat and smooth so that the skate wheels can roll without deviation.

1.2 Dimensions

1.2.1 The pitch shall be a minimum size of **15 m** by **30 m** and a maximum size of **30 m** by **60 m**.

1.2.2 For international events, the pitch must be a minimum size of **20 m** by **40 m** and must have rounded corners and boards. If a hall with walls is used the pitch must have rounded corners.

1.2.3 The corners should be rounded in a circular arc with a radius of between **2 m** and **4 m** in proportion to the size of the pitch. Two thirds of the width must be rectilinear.

1.3 Boards

1.3.1 ‘Boards’ shall surround the pitch.

1.3.2 The boards shall be between **0.8 m** and **1.22 m** high. The measurement must be taken from the playing surface to the top of the boards. A flush wall of a building or a combination of a wall and boards can also be used.

1.3.3 The boards shall be smooth and free of any object that could cause injury to the players. They must be firmly fixed and able to withstand impact from the players. All doors giving access to the playing surface must swing away from the pitch and must be securely fastened. All protective screens and gear used to hold the boards in position must be mounted on the side away from the playing surface.

1.3.4 Advertising may be placed on the boards.

1.3.5 For international Class A matches, approval and permission must be granted by the IISHF. For all other games, approval and permission must be granted from the proper authorities.

1.4 Pitch Markings

1.4.1 All measurements shall be from the centre of the line to the centre of the next line, or from the wall/boards to the centre of the line.

1.4.2 All lines and markings on the pitch shall be between **4 cm** and **10 cm** in width, but they must be of one standard width. All markings must be the same colour and must be clearly distinguishable from the playing surface.

1.4.3 For international Class A matches a **goal line** shall be marked completely across the playing surface, at least **2 m** and no more than **3 m** (dependent on the size of the pitch) from each end of the pitch.

1.4.4 For other matches the **goal line** may be marked on the pitch according to 1.4.3 or solely inside the goal crease.

1.4.5 For international Class A matches a **goal area line** shall be drawn completely across the playing surface, at least **5 m** and no more than **6 m** from the goal line (the **6 m** measurement should only be used on larger pitches).

1.4.6 For all other matches the **goal area line** may be marked as above or it may be an imaginary line between the two face-off spots on either side of the pitch.

1.4.7 For International Class A matches a **centre line** shall be drawn completely across the playing surface and continued vertically up the side of the boards exactly halfway between each end of the pitch.

1.4.8 For all other matches the **centre line** may be marked as above or it may be an imaginary line extending from the centre spot to either side of the pitch.

1.4.9 The **goal crease** is **1 m** by **2.50 m** and shall be marked as follows: **1.25 m** on either side of the centre of the **goal line**, two lines, **1 m** in length shall be drawn at right angles to the goal line and point towards the halfway line. The ends of these lines furthest from the goal line shall be joined by another line.

1.4.10 The area between each end of the pitch and the goal area line shall be called the **goal area**.

1.4.11 The **goalpost markers** shall be marked as follows: between **90 cm** and **93 cm** (dependent on the width of the goal) on either side of the goal line, 2 lines **30 cm** in length shall be drawn at right angles across the goal line (**15 cm** each side).

1.4.12 The **face-off spots** shall be marked as follows: **6 m** from the centre of the pitch on the **goal area line** a line shall be drawn at right angles extending **20 cm** in each direction (a circle of **20 cm** radius can be drawn at the same position). In all circumstances where an imaginary goal area line is used a line must be marked **20 cm** in each direction at right angles to and running through the centre of the face-off spot.

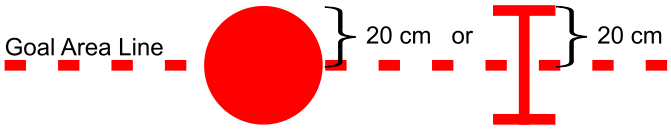

1.4.13 The **centre face-off spot** shall be marked as follows: Midway along the centre line, a line shall be drawn at right angles to the centre line extending **20 cm** in each direction (a circle of **20 cm** radius can be drawn at the same position). In all circumstances where an imaginary centre line is used a line must be marked **20 cm** in each direction at right angles to and running through the centre of the centre face-off spot.

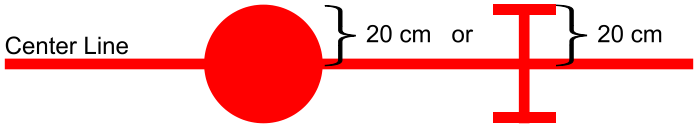

1.4.14 A circle or broken circle of a **3 m** radius (free-hit distance) should surround each face-off spot. Alternatively a straight line, 50 to 100 cm in length, can be drawn at a position located 3 m from each face-off spot towards the respective goal.

1.4.15 The **referees' crease** shall be marked as follows: A semi-circle of **2 m** radius shall be drawn with its centre touching the board immediately in front of the timekeeper's position. Alternatively the referees' crease can be an imaginary area at the given location in front of the timekeeper's desk.

1.4.16 For one team the half in which their goal is situated is the **Defending Zone**. The other half is the **Attacking Zone**.

1.5 Players' Benches

1.5.1 Each pitch shall be provided with seats or benches to accommodate 18 players and 5 officials of each team. The accommodation provided, shall be identical for both teams, and shall be placed immediately alongside the pitch as near to the centre of the pitch as possible, and separated from each other. Both players' benches shall be placed on the same side of the pitch. All doors into the players' benches shall swing away from the pitch.

1.5.2 No other person except the 18 players and the 5 team officials, who must have been registered on the kit check list or IISHF match sheet before the game, shall be permitted to occupy the players' bench area.

1.5.3 Each team must use the same team bench for the whole of the game. The first named team on the match sheet has the right to choose the bench.

1.5.4 The players' bench area must be separated from the spectators.

1.6 Penalty Box

1.6.1 The penalty boxes should be on the opposite side of the pitch to the players' benches and should be separated by the timekeeper's box. The penalty boxes shall have seats or benches to accommodate penalized players.

1.6.2 The penalty boxes shall be situated as close to the centre of the pitch as possible. All doors to the penalty boxes shall swing away from the pitch and shall not lie within the referees' Crease.

1.6.3 The penalty boxes shall be separated from the players' benches and the spectators.

1.6.4 For International Class A matches rules 1.5 and 1.6 must apply. For all other matches, if a combination of boards and flush wall are used, the players' benches should be at each end of the pitch and the penalty boxes and timekeepers' box should be as near to the centre of the pitch as possible.

1.7 Timekeepers' Box

1.7.1 The timekeepers' box should be on the opposite side of the pitch to the players' benches and should be situated at the centre of the boards with the penalty boxes on each side and must be separated from the spectators.

1.7.2 The timekeepers' box should have a table and chairs to accommodate both of the timekeepers, the Tournament Director and the relevant material required from rule 2.3.

1.8 Pitch Lighting

1.8.1 The lighting on all pitches must be sufficient so that all players, officials and spectators may conveniently follow play at all times.

1.8.2 If in the opinion of the referees, there is not sufficient light to continue the game, the referees shall have the authority to postpone the remainder of the game or take time-out pending the necessary improvement to the lights.

1.8.3 If one team is being handicapped to a greater extent by failure of lights and in the opinion of the referees, the game should not be cancelled; they shall have the authority to alternate the teams so that each team will play the same amount of time in each end of the pitch.

1.9 Dressing Rooms

1.9.1 Each pitch shall provide suitable dressing rooms equipped with toilet and shower with sufficient space for 18 persons with equipment, for the use of the teams.

1.9.2 Each pitch shall provide a suitable dressing room equipped with toilet and shower for the use of the match officials.

1.9.3 No unauthorized person shall be allowed to enter the officials' dressing room, before, during or immediately after a Game.

INFRINGEMENT: Match penalty (MP; red card) or gross match penalty (GMP; black card) on a player or team official. Any other person will be expelled from the venue immediately.

The referee(s) and/or Tournament Director must write a report.

1.10 Smoking at the venue

1.10.1 In enclosed venues, smoking shall be prohibited in the playing and spectator areas, as well as in the dressing rooms and all the facilities where the players are involved.

1.10.2 On outdoor venues, smoking shall be prohibited in the immediate vicinity of the rink – this includes the area at and around the timekeepers' box, the penalty boxes and the players' benches – as well as in the dressing rooms and all the facilities where the players are involved.

1.11 Music at the venue

1.11.1 No music shall be played while the game is in progress, or during the time-outs.

1.11.2 Compressed air horns and whistles are forbidden on and around the rink unless they are part of the official match equipment. Any other sounding devices are also forbidden if they can be confused with the signalling equipment used by the referees and the timekeepers.

1.12 Exemptions

1.12.1 Exemptions from the rules 1.1 to 1.11 are permissible upon application to the IISHF with regard to international matches, or by the National Member Association with regard to all other (domestic) games.

1.12.2 For international matches or tournaments all the teams taking part must be informed of any exemptions in writing a minimum of four weeks beforehand.

2. Match Equipment

2.1 Goals

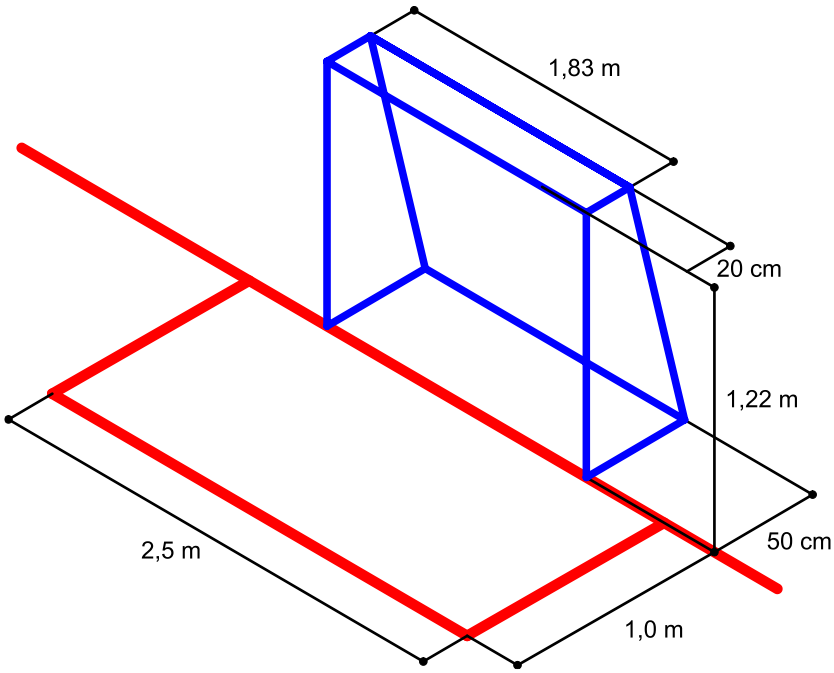

2.1.1 The goal cage must be made of metal or synthetic material of strong enough construction to withstand impact from players. The goal cage must not be fixed to the ground, allowing the goal cage to move on impact from the players.

2.1.2 The goal cage shall be positioned so that the fronts of the goal posts are level with the front of the goal line and on the goalpost markers.

2.1.3 The inside measurements of the goalmouth shall be **1.22 m** high and **1.83 m** wide. These measurements can be plus or minus **3 cm**. Both goals must be the same size.

2.1.4 The goal posts and cross bar shall be square or round in cross section, with a minimum measurement of **3 cm** and a maximum of **6 cm**. All posts and cross bar must be of one standard thickness and must not have any sharp edges.

2.1.5 The distance from the front of the goal post to the rear of the goal cage at floor level shall be a minimum of **50 cm** and a maximum of **1 m**. At cross bar level a minimum of **20 cm** and a maximum of **50 cm**.

2.1.6 All goals shall be constructed so that the floor level measurement always is a minimum of **30 cm** larger than the measurement at cross bar level.

2.1.7 The back, sides and the top of each goal shall have attached a net constructed in such a manner as to keep the ball within the confines of the goal. The mesh used must not allow the ball to pass through.

2.1.8 The goal posts, cross bar and supporting framework shall be painted in a colour easily distinguishable from the playing surface and the boards. Red shall not be used if either the playing surface or boards are green.

2.1.9 The goal must be equipped with drop nets.

2.2 Ball

2.2.1 The IISHF shall determine the official ball to be used for all Inline Skater Hockey games.

2.2.2 The official ball's dimensions and weight is:

	Diameter	Weight
Norm	67,0 mm	106 g
±	1,75%	2,00%
Norm+	68,2 mm	108,1 g
Norm-	65,8 mm	103,9 g

2.2.3 The colour of the ball is bright orange and may display logos.

2.3 Match Equipment

2.3.1 For each match the host should provide:

- Pitch (rules 1.1, 1.2),
- Adequate boards (rule 1.3),
- Official Inline Skater Hockey pitch markings (rule 1.4),
- A set of two goals which comply with the size regulations (rule 2.1),
- A minimum of two team changing rooms (rule 1.9.1),
- An officials' changing room (rule 1.9.2),
- Players' benches, timekeepers box and penalty boxes (rules 1.5 and 1.6),
- Two approved timekeepers,
- Approved IISHF Inline Skater Hockey balls in sufficient quantity (minimum 10 balls),
- A measuring tape a minimum of 2 m in length,
- Two stop watches/time clocks,
- A horn or similar sounding device and a secondary sounding device,
- A floor cloth, cleaning mop or similar cleaning cloth,
- Two referee whistles,
- Two sets of referee cards (yellow, red and black),
- A copy of the current IISHF Rulebook,
- IISHF match sheet,
- Supplementary sheets,
- A manual score board,
- An electric score board, indicating score, game time and penalties,
- A public address system,
- A first aid kit (box) fully equipped to national standards,
- A person with current first-aid qualification should be available at all matches at all times.

2.3.2 If the host fails to provide any of the following:

- Pitch,
- Adequate boards,
- A set of two goals which comply to the size regulations,
- A time clock,
- One IISHF match sheet,
- One approved IISHF ball,
- One approved timekeeper,
- Official Inline Skater Hockey pitch markings,
- Players' benches, timekeepers box and penalty boxes (rules 1.5 and 1.6)

no later than 15 minutes after the scheduled start of a match (5 minutes for tournaments) then the match will be called off and regarded as non-participation by the host club or team. The referees must note the missing item(s) on a supplementary sheet and the host club or team will be subject to penalties under the disciplinary regulations of the National Member Association or the IISHF Disciplinary Regulations for international games, tournaments and events.

2.3.3 If the host provides all of the items in 2.3.2 above, but fails to provide the additional items in 2.3.1 no later than 15 minutes after the scheduled start of a match (5 minutes in tournaments) the match will take place in any case. The referees must list each missing item(s) on the supplementary sheets. The host club or team will be

subject to penalties under the disciplinary regulations of the National Member Association or the IISHF disciplinary regulations for international games, tournaments and events.

2.3.4 For international matches, tournaments and events the pitch is to have a visible time clock and scoreboard to be used by the timekeepers to keep the players, officials and spectators informed as to all time elements at all stages of the game.

Failure of the host to provide will result in penalties under the disciplinary regulations of the National Member Association or the IISHF Disciplinary Regulations for international games, tournaments and events.

3. Officials

3.1 Appointment of Officials

3.1.1 For all Class A matches there shall be appointed for each game by the IISHF:

- One Tournament Director,
- Two referees,
- Two timekeepers,
- One kit check referee,
- Two penalty box stewards,
- Two goal judges (recommended).

3.1.2 For all other international matches there shall be appointed by the IISHF/National Member Association:

- One Tournament Director,
- Two referees,
- Two timekeepers,
- One kit check referee,
- Two penalty box stewards.

3.1.3 For all other matches

- Two referees,
- Two timekeepers

shall be the minimum number of game officials.

3.1.4 The proper authorities in whose territory the game is being played shall appoint the match officials according to 3.1.3. The referees cannot be active or passive members of clubs or teams taking part in the game.

3.1.5 The timekeepers shall be appointed by the host (tournaments) or the home team (all other games).

3.1.6 The guest teams are allowed to request to provide a timekeeper, but must make this request at least 30 minutes before the game.

3.1.7 The match officials should perform their duties during the whole game.

3.1.8 If no authorized referees have been appointed or that the appointed referees do not appear, the referees may be chosen by mutual agreement between the two competing teams.

3.1.9 The acting Referee Manager/Tournament Director is authorized to speak to the appointed officials during intervals/stoppages of a match in progress.

3.2 Tournament Director

3.2.1 The Tournament Director has full jurisdiction over all game officials except decisions made by the referees during a game. The Tournament Director has full authority on matters relating to safety and game equipment.

3.2.2 All IISHF matches and tournaments must have an appointed Tournament Director who must speak English. The Tournament Director should be an international referee.

3.2.3 The Tournament Director is responsible for briefing all officials.

3.2.4 The Tournament Director must ensure that all game officials are dressed correctly in the IISHF/National Member Association approved uniform and are equipped with the official IISHF/National Member Association equipment.

3.2.5 The Tournament Director must be available to assist referees and timekeepers during games if so required.

3.2.6 The Tournament Director must monitor the performance of all officials during the event and take any corrective action that may be required.

3.2.7 The Tournament Director is responsible for checking that the pitch and the venue are safe and that the pitch is clean and correctly marked.

3.2.8 The Tournament Director is responsible for checking that all match equipment is available and complies with the current IISHF Rules of the Game and is in good order. The Tournament Director must record the result of the check on a supplementary sheet.

3.2.9 The Tournament Director is responsible for checking that all the timing devices are in good order and that all match sheets and other administration is prepared.

3.2.10 The Tournament Director is responsible for ensuring that an area is designated for kit checking and shall ensure that all kit checking is completed correctly.

3.2.11 The Tournament Director must check that a qualified first aid person is available throughout the event.

3.2.12 The Tournament Director must check that all match reports, game sheets and any supplementary sheets are completed correctly.

3.2.13 The Tournament Director is responsible for ensuring that all paperwork is distributed to the correct authorities at the end of the event.

3.2.14 For Tournaments: The Tournament Director must arrange at least one officials' meeting prior to the event starting and must inform all officials in advance of the date, venue and the time of such meeting. The Tournament Director can arrange further meetings throughout the event if required.

3.2.15 The Tournament Director is responsible for obtaining the playing schedule from the host and must schedule the officials for the games. This schedule must be distributed to the officials on time.

3.3 Referees

3.3.1 The referees shall have total supervision of the game, and shall have full control of all game officials and players during the game including stoppages. They are the sole judges of fact and law and in the case of any dispute regarding time, or any other dispute, their decision shall be final and binding.

3.3.2 After the end of the game, the referees shall immediately retrieve the ball. The referees shall remain on the pitch at the end of each period and at the end of the game until all of the players have shaken hands and left the pitch (infringement, see rule 8.25.12).

3.3.3 For tournaments the Tournament Director's and referees' power of jurisdiction shall be for the duration of the event.

For all other matches, the Tournament Director's and referees' power of jurisdiction shall extend from 30 minutes before the published time of the start of the game until they have completely finished their respective official duties.

3.3.4 For all international games, all referees must be dressed in the IISHF approved uniform and shall be equipped with efficient skates, the official penalty cards, one approved referee whistle and must produce an official referee pass. All referees must wear an approved certified black helmet (rule 5.5). Referees who wear spectacles must wear a black helmet fitted with a half visor.

3.3.5 No referee may wear or carry anything dangerous onto the pitch (see rule 5.18).

3.3.6 Metal objects other than that forming part of the approved equipment is forbidden.

3.3.7 Referees with long hair must ensure that it is suitable restrained.

3.3.8 The referees (if there is no Tournament Director present) must check before each game that the host has provided the required pitch and match equipment. They must record the result of the check on a supplementary sheet.

3.3.9 The referees shall order the teams on to the pitch at the appointed time for the beginning of the game and for the beginning of each period. If a team fails to turn up or refuses to start, (infringement: rule 8.18) the referees must write a report and forward it to the proper authorities.

3.3.10 The referees shall, before starting the game, see that the appointed game officials are in their respective positions, and satisfy themselves that the timing and signalling equipment are in order.

3.3.11 Referees must not give any instruction or advice to either team before the game, which could be considered an advantage or disadvantage to either team.

3.3.12 During the game, a referee must not consult with any person other than the other referee or any other official, but only on a point of fact relating to that officials' function.

3.3.13 A referee can alter a decision, if the decision was given before the referee spoke with the other referee. A referee cannot alter a decision after the game has re-started.

3.3.14 The referees shall inform the timekeepers of the number of the players scoring and assisting each goal.

3.3.15 The referees must indicate a time penalty by use of the official signals to the offending player(s). They must indicate the time penalty imposed and the infringement.
The referees must then inform the timekeepers by use of the official signals and, if need be, verbally the number of each player on whom a penalty is imposed, the duration of the penalty and the infringement.

3.3.16 The referees shall not discuss verbally the reasons for calling a penalty to anyone except the Tournament Director and the other referee. They shall simply show the hand signal for the penalty given. The referees shall not enter into any discussion with anyone regarding decisions they have made.

3.3.17 Immediately after the end of the game, the referees and timekeepers shall check and sign the match sheet and supplementary sheets. In case of any game-misconduct, match or gross match penalties, injuries, non-participation etc. the referees must immediately write a report on a supplementary sheet giving all details and must forward the report to the proper authorities.

3.4 Kit check referee

3.4.1 The kit check referee can be the match referee.

3.4.2 The kit check referee is responsible for the following:

a) To obtain a kit check list from the Tournament Director's office thirty minutes before the start of a game (see rule 4.2.6).

b) Check that all players' numbers are correct on the match team list.

c) Check that all players are wearing the correct safety equipment and note on the kit check list that the player has been successfully checked. In the case of any failures these must be noted on the kit check list. The player must correct all failures and must be re-checked by the kit check referee and noted as a successful check before the player is allowed to go to the pitch.

d) Ensure that a team official or the team captain signs the kit check list.

e) Ensure that the timekeepers receive the completed kit check list before the start of the game.

3.5 Timekeepers

3.5.1 The timekeepers are responsible for the following:

a) To obtain a completed kit check list showing the players taking part in the game from the kit check referee before the start of the game.

b) The timekeepers must ensure that a C and A have been placed next to the names of the captains and assistant captains on the match sheet.

c) To record the start and end of each game and the actual playing time during the game using the timing device.

d) To operate one stopwatch as a backup in case of failure of the main device.

e) To signal by use of the main sound device the end of each period and time-outs.

f) To time the fixed interval between periods and the interval for time-outs.

g) To ensure that both teams are on the pitch at least two minutes before the start of each period

h) To announce when two minutes remain in the final period of the game and in the final period of overtime with an alternate sound device.

i) To ensure that the game clock is stopped when the referee blows the whistle in the final two minutes of the game and in the last two minutes of the final period of overtime.

j) To announce the end of the game by use of the main sound device.

k) To record all penalties imposed by the referees (including the number of the players penalized, the duration of the penalty, the time at which each penalty was imposed and for which offence; after the penalty has elapsed this time is also recorded).

l) To ensure that the time served by the penalized players is correct and that they are released from the penalty box at the proper time.

m) To inform the penalized player when the player has 15 seconds remaining of the player's penalty.

n) To record the goals scored, the scorer and the assistant on the match sheet.

o) To inform the referees any abuse or misconduct by any person to any of the off pitch game officials.

p) To prepare the match sheet for signing by the referees, the team captains and the Tournament Director.

q) All timekeepers must be impartial and maintain good conduct at all times.

3.6 Penalty Box Stewards

3.6.1 The penalty box stewards are responsible for the following:

a) To release penalized players from the penalty box on instruction from the timekeeper.

b) To ensure that the penalized players remain seated in the penalty box for the duration of their penalty.

c) To report to the timekeeper any misconduct or abuse by the penalized player.

d) All penalty box stewards must be impartial and maintain good conduct at all times.

e) All penalty box stewards must be 18 years or older.

3.7 Goal Judge

3.7.1 There shall be one goal judge at each goal. They shall not be members of either team engaged in the game, nor shall they be replaced during its progress unless exceptional circumstances make a replacement necessary. If, after the commencement of the game, it becomes apparent that either goal judge because of partisanship or any other cause is guilty of giving unjust decisions, the referees or the Tournament Director may appoint a replacement.

3.7.2 Goal judges shall be stationed behind the goals, immediately outside the boards, during the progress of play. They shall not change ends during the game.

3.7.3 The goal judge shall decide only if the ball has passed between the goal posts, and under the crossbar, and then give the appropriate signal. It is not part of the goal judge's duty to decide if a goal has been legally scored. A referee is the only person who can award a goal.

3.8 Proper Authorities

3.8.1 The term **'Proper Authorities'** as applied under these rules is defined as:

- For international events the IISHF,
- For other events, the National Member Association of the games involved.

For tournaments the National Member Association can delegate their power to the tournament organization committee.

3.9 Abuse of Officials

3.9.1 A player, goalkeeper, coach or non-playing person shall not challenge or dispute the rulings of an official before, during or after a game. A player, goalkeeper, coach or non-playing person shall not display unsportsmanlike conduct including, but not limited to, obscene, profane or abusive language or gestures, comments of a personal nature intended to degrade an official, or persist in disputing a ruling after being told to stop or after being penalized for such behaviour.

When such conduct is directed at anyone other than an official, rule 8.16 or 8.17 shall be applied.

INFRINGEMENT: **Minor penalty (2') - A minor penalty for unsportsmanlike conduct shall be assessed under this rule for the following infractions:**

Any player who challenges or disputes the ruling of an official.

Any identifiable player who uses obscene, profane or abusive language or gestures directed at any on or off-pitch official.

Any player or players who bang the boards with their sticks or other objects at any time, or who, in any manner show disrespect for an official's decision. If this is done in order to get the attention of the on-pitch officials for a legitimate reason (i.e. serious injury, illness, etc.), then discretion must be exercised by the Referees.

When a Captain, Assistant Captain or any other player comes off the players' bench to question or protest a ruling by an official on the pitch.

If a penalized player is assessed an additional unsportsmanlike conduct penalty either before or after he begins serving his original penalty(ies), the additional minor penalty is added to his unexpired time and served consecutively.

In general, participants displaying this type of behavior are assessed a minor penalty, then a misconduct penalty, then a game misconduct penalty, then a match penalty/gross match penalty if they persist.

3.9.2 No person shall deliberately touch, hold or strike a referee or any other game official with the hands or stick nor shall any person trip, body check or attack any such official on or off the pitch.

INFRINGEMENT: Match penalty (MP; red card) or gross match penalty (GMP; black card).

4. Teams

4.1 Age Limits

4.1.1 **SENIOR (WOMEN/MEN)**

Lower Limit: A player who on completion of the current calendar year is 19 years of age or older.

4.1.2 **MASTERS (WOMEN/MEN)**

Lower Limit: A player who on completion of the current calendar year is 50 years of age or older.

During the transition period the following lower age limits apply: 2026: 45 years, 2027: 46 years, 2028: 47 years, 2029: 48 years, 2030: 49 years, 2031: 50 years

4.1.3 **VETERANS (WOMEN/MEN)**

Lower Limit: A player who on completion of the current calendar year is 38 years of age or older.

During the transition period the following lower age limits apply: 2026: 35 years, 2027: 36 years, 2028: 37 years, 2029: 38 years

4.1.4 **U-19 (JUNIOR**)

Upper limit: A player who on completion of the current calendar year is 18 years of age.

Lower limit: A player who on completion of the current calendar year is 16 years of age.

4.1.5 **U-16 (YOUTH)**

Upper limit: A player who on completion of the current calendar year is 15 years of age.

Lower limit: A player who on completion of the current calendar year is 13 years of age.

4.1.6 **U-13 (PEE WEE)**

Upper limit: A player who on completion of the current calendar year is 12 years of age.

Lower limit: A player who on completion of the current calendar year is 10 years of age.

4.1.7 **U-10 (MINNOW)**

Upper limit: A player who on completion of the current calendar year is 9 years of age.

4.1.8 All players in the U-19, U-16, U-13 and U-10 age groups are allowed to play into the next higher age group.

All female players may play one year longer in each age group.

All female players in the U16 and U19 age groups are allowed to play into the senior women age group.

Any player who plays into a higher age group must have the approval of the player's parents. The responsibility to obtain parental approval is on the National Member Association.

4.1.9 For tournaments involving several age categories, players who are playing up into a higher age group are not permitted to play for both teams on the same day and must play in the team of their correct age group.

4.1.10 Girls/women are allowed to play in a men's team of their own age group. If a woman is playing in a men's team and a women's team and there is an overlapping of games, she must play in the women's team.

4.1.11 Exceptions to rules 4.1.1 to 4.1.10 can only be made after approval by the IISHF for international matches and by the National Member Association for other matches.

INFRINGEMENT OF RULE 4.1:	**The score will stay the same but the offending team will be subject to penalties under the Disciplinary Regulations of the National Member Association or the IISHF Disciplinary Regulations for international games, tournaments and events.**

4.2 Team Composition

4.2.1 Each team shall be allowed a maximum of 16 outfield players and 2 goalkeepers for a total of 18.

4.2.2 The minimum number of players to start a game is 5 players specified as 4 outfield players and 1 goalkeeper.

For international matches the minimum number that shall be registered is 8 (7 outfield players and 1 goalkeeper). These players must be kitted up and be on the players bench or on the pitch for the first game.

An exception is only possible if under proven force majeure (penalties and cards are not considered as force majeure).

4.2.3 Each team, with the exception of men's, old-boys and women's teams, must have at least one bench official.

4.2.4 All team bench officials must be 16 years or older. At least one team bench official must be 18 years or older.

4.2.5 All players must be registered with their National Member Association.

4.2.6 At least 30 minutes before the start of each game, a team official or the captain of a team shall submit to the Tournament Director or the Tournament Director's office, all identification documents (only for the first game of a tournament) and a list of players who shall be eligible to play in that game indicating all jersey numbers and - if applicable - license/membership card numbers, in the following order:

- Captain and assistant captain,
- Goalkeepers,
- Outfield players,
- Team bench officials.

The identification document can either be a valid playing pass (membership card) or valid permission issued by the parent National Member Association or valid passport (National Identity card). Individuals listed as players cannot be listed as team bench officials at the same time.

4.2.7 Before the start of a game a team official or the team captain from each team must sign the match Sheet to confirm the team lists. The referees may only start the game when a team official or the captain from each team has signed the match sheet.

4.2.8 The license/membership cards must be produced for checking and shall remain at the timekeepers' desk for the duration of the game. Once the game has started, no other players can be added to the match sheet.

4.2.9 If a player who is not listed on the match sheet participates in a game, and the omission was **a genuine error**, then the score at the end of the game will stand. In the case of a dispute regarding genuine error, the proper authorities will decide the matter.

4.2.10 If a player who is not listed on the match sheet participates in a game and the omission was **not a genuine error** or if an ineligible, banned or suspended player participates in a game, the non–offending team shall win the game and gain 2 points.

The score will be as follows:

- The non-offending team shall keep their score + 5 goals.
- The offending team shall have a score of 0 goals.

The referees must write a report on a supplementary sheet giving full details of the occurrence.

4.2.11 The maximum number of players of a team that may be kitted up and play in any one game is 18. Only these 18 players plus 5 team officials may be on the players' bench during a game (any person not kitted up to play will be deemed to be a bench official).

4.2.12 It is permissible to replace a goalkeeper with an outfield player at any time during a match.

4.2.13 The maximum number of players that may be on the pitch while play is in progress is 5; only one of these may be a goalkeeper.

If at any time, a team has more than 5 players on the pitch or the number to which they are entitled by reason of penalties:

INFRINGEMENT: A bench penalty (2') shall be imposed on the offending team.

In the last two minutes of the game or the last two minutes of overtime: penalty shot in addition to the minor penalty.

4.2.14 The minimum number of players of a team that must be on the pitch is 3. If a team cannot put the required number of players on to the pitch due to penalties, injuries, absence or lateness, the team shall forfeit the game. The victory will be awarded to the non-offending team and they will gain 2 points.

The score will be as follows:

- The non-offending team shall keep their score + 5 goals
- The offending team shall have a score of 0 goals.

The referees must write a report on a supplementary sheet giving full details of the occurrence.

4.3 Team Captain

4.3.1 Each team shall appoint one **captain** and only the captain, when invited to do so by the referee, shall have the privilege of discussing any point relating to the interpretation of rules. Any captain, assistant captain or any player who comes off the bench and makes any protest or intervention with the officials for any purpose shall be assessed a minor penalty for unsportsmanlike conduct under rule 3.9. Should this protest continue, he may be assessed a misconduct penalty, and if it further continues, a game misconduct penalty shall be warranted.

A complaint about a penalty is not a matter "relating to the interpretation of the rules" and a minor penalty shall be imposed against any captain, assistant captain or any other player making such a complaint.

4.3.2 The captain shall wear the letter '**C**' of a minimum of **10 cm** in height and in a contrasting colour to the jersey, and in a conspicuous position on the upper left front part of the jersey. If the letter **C** is not worn, privileges under this rule will not be permitted.

4.3.3 Another player in each team shall be appointed as **assistant captain** and the assistant captain shall wear the letter '**A**' on the jersey as described in 4.3.2. Only if the captain is on the players' bench or is not available due to injury or penalty may the assistant act as captain.

4.3.4 Team managers, coaches and goalkeepers are not permitted to be captain or assistant captain.

4.3.5 The captain and assistant captain of each team shall be indicated on the match sheet before the start of the game.

5. Players' Dress and Equipment

5.1 Equipment

5.1.1 All protective equipment must meet approved certified international standards for ice hockey, inline-hockey or Inline Skater Hockey.

5.1.2 Only The IISHF Rules Committee is authorized to approve equipment according to the standards for Inline Skater Hockey.

5.1.3 All equipment used must not be modified or altered in any way unless granted an explicit written permission from the IISHF Rules Committee.

5.1.4 Players' and goalkeepers' equipment shall consist of sticks, skates, protective equipment and uniforms.

5.1.5 All protective equipment, except gloves, helmets and goalkeepers' leg guards, shall be worn entirely underneath the uniform.

5.1.6 It is illegal to have any part of the equipment hanging outside the uniform. Braces, long laces on gloves etc. must be kept in for safety and long hair must be suitably restrained to the satisfaction of the referee. It is not allowed to wear towels.

5.1.7 All players including goalkeepers can have their equipment checked before playing by a qualified referee (kit check referee). Any equipment found to be faulty or illegal must be removed, repaired or changed to the satisfaction of the referee.

5.1.8 Any players found to have any equipment not conforming to the rules by the referee during the game:

INFRINGEMENT: **On the first occasion: verbal warning against the player. The player must go to the players' bench immediately to get his equipment corrected.**

On the second and subsequent occasions: Misconduct penalty (10'; yellow card) on the player.

5.2 Players' Skates

5.2.1 Each player must wear skates.

5.2.2 Each skate must have wheels all of which must turn.

5.2.3 The wheels and trucks/frame must be securely attached to the boots.

5.2.4 Wheels must be made of urethane or other approved material.

5.2.5 Toe and heel stops are permitted provided that they are of a light coloured material.

5.2.6 All skates must be in good order and must not have any protrusions that could be a danger to other players or cause damage to the pitch surface.

5.2.7 All skates must have the correct number of wheels for which they were designed.

5.3 Players' Stick

5.3.1 Sticks shall be made of wood or other approved material.

5.3.2 A stick must not have any projections and all edges shall be bevelled.

5.3.3 Adhesive non-fluorescent tape of any colour may be wrapped around the stick at any place. The butt end must be taped so that there are no sharp edges that could cause injury to other players.

5.3.4 Player's stick dimensions:

Shaft: maximum length – **163 cm** from the heel to the end of the shaft

maximum width – **3 cm**

maximum thickness – **2.5 cm**

shaft shall be straight

Blade: maximum length – **32 cm** from the heel to the end of the blade

maximum width – **7.5 cm**

minimum width – **5 cm**

5.3.5 The blade may be curved, and the curvature shall be restricted in such a way that the distance of a perpendicular line, measured from a straight line drawn from the heel to the end of the blade, does not exceed **3 cm**.

5.3.6 All shafts and blades must have a smooth finish with no sharp edges and no cracks or damage that could cause injury to other players. Blades must not be cut or altered in any way.

5.4 Players' Protective Equipment

5.4.1 Players in the Senior (Women/Men) (4.1.1), Masters (Women/Men) (4.1.2) and Veterans (Women/Men) (4.1.3) age group, except the goalkeepers, must wear the following protective equipment:

- Helmet (players born **after December 31,1992** with full face cage or full visor) – see 5.5 and 5.6
- Elbow pads
- Protective box
- Protective padded shorts/girdle (pads must cover thighs, coccyx, hips and kidneys)
- Knee and shin pads
- Gloves – see 5.7

5.4.2 Players in the U-19 (4.1.4), U-16 (4.1.5), U-13 (4.1.6) and U-10 (4.1.7) age group, except the goalkeepers, must wear the following protective equipment:

- Helmet with full face cage or full visor – see 5.5 and 5.6
- Elbow pads
- Protective box
- Protective padded shorts/girdle (pads must cover thighs, coccyx, hips and kidneys)
- Knee and shin pads
- Gloves – see 5.7
- Shoulder and chest protector – see 5.8

5.4.3 All players in the U-16 and U-19 age groups playing into the senior age group must wear full protective equipment according to 5.4.2.

5.5 Players' Helmet

5.5.1 During the game and during the pre-game warm-up, all players shall wear a hockey helmet with a manufactured chinstrap securely fastened.

5.5.2 A helmet shall be worn so that the lower edge of the helmet is not more than one finger-width above the eyebrows, and there shall only be enough room between the strap and the chin to insert one finger.

5.5.3 Should the helmet of a player come off while play is in progress, the player shall not be permitted to participate in the play except if he replaces the helmet on his head with the chinstrap securely fastened. If the player continues to play without his helmet properly fastened:

INFRINGEMENT: Misconduct penalty (10'; yellow card)

5.6 Players' Face Mask and Visor

5.6.1 It is recommended that all players wear a full-face mask or at least a visor.

5.6.2 Players born **after December 31, 1992** must wear a full-face mask.

5.6.3 The visor shall extend down to cover the eyes and the lower edge of the nose in frontal and lateral projections.

5.6.4 Players shall not be permitted to wear a coloured or tinted visor or tinted full-face mask unless the game is played outdoors.

5.6.5 The full-face masks shall be constructed in such a way that neither the ball nor a stick blade might get through it.

5.6.6 The face mask or visor must be securely affixed to the helmet on both sides to ensure it remains firmly in place and does not move independently from the helmet upon impact. Additionally, it must be designed and attached in a manner that prevents it from being flipped up.

5.7 Players' Gloves

5.7.1 The players' gloves shall cover hand and wrist and their palms must not be removed to use bare hands to handle the stick.

5.7.2 Should the gloves of a player come off while play is in progress, the player shall not be permitted to participate in the play except if he replaces the gloves. If the player continues to play without his gloves:

INFRINGEMENT: Misconduct penalty (10'; yellow card)

5.8 Shoulder and Chest Protector

5.8.1 Players in the U-19 age group and younger must wear a shoulder and chest protector.

5.8.2 Upper body padded protective shirts without shoulder pads (e.g. Mission® Thorax™) are not allowed for players in the U-19 age group and younger. They are allowed as additional protective equipment for all other age groups.

5.9 Mouth Guard

5.9.1 It is recommended that all players not wearing a full-face mask wear a custom made mouth guard.

5.10 Goalkeepers' Equipment

5.10.1 With the exception of skates and stick, all the equipment worn by the goalkeeper shall be constructed solely for the purpose of protecting the head and the body and shall not include any garment or addition which would give the goalkeeper undue assistance in keeping goal. Abdominal aprons, extending down the front of the thighs on the outside of the pants, are prohibited.

5.11 Goalkeepers' Skates

5.11.1 Goalkeepers' skates shall meet the same requirements as players' skates under 5.2.

5.11.2 Goalkeepers are allowed to wear special goalkeepers' skates with a lower shaft and smaller wheels.

5.12 Goalkeeper's Stick

5.12.1 Sticks shall be made of wood or other approved material approved.

5.12.2 It shall not have any projections and all edges shall be bevelled.

5.12.3 Adhesive non-fluorescent tape of any colour may be wrapped around the stick at any place. The butt end must be taped so that there are no sharp edges that could cause injury to other players.

5.12.4 Goalkeepers' stick dimensions:

Shaft: Maximum length – **163 cm** from the heel to the end of the shaft

Maximum width – **3 cm**

Maximum thickness – **2.5 cm**

Widened part of the shaft: maximum length – **71 cm** from the heel and not more than **9 cm** wide.

The shaft shall be straight.

Blade: Maximum length – **39 cm** from the heel to the end of the blade

Maximum width – **9 cm**, except at the heel where it shall not exceed **11.5 cm**

5.12.5 The goalkeeper's stick blade may be curved, and the curvature shall be restricted in such a way that the distance of a perpendicular line, measured from a straight line drawn from the heel to the end of the blade, must not exceed **3 cm**.

5.12.6 All shafts and blades must have a smooth finish with no sharp edges and no cracks or damage that could cause injury to other players. Blades must not be cut or altered in any way.

5.13 Goalkeepers' Protective Equipment

5.13.1 Goalkeepers must wear the following equipment:

- Helmet with full-face mask or a goalkeeper's full-face head protector.
- Neck and throat protector that provides effective protection against impacts or contact from the ball, sticks, or any other object that could endanger the goalkeeper in the neck or throat area. In addition, goalkeepers are permitted to use a plastic throat protector ("dangler") attached to their helmet or face mask.

- Full goalkeeper body armour incorporating these items
  - shoulder protectors
  - chest protector
  - abdominal protector
  - elbow and arm protectors
- Protective box
- Protective padded shorts (original padding must cover thighs, coccyx, hips and kidneys)
- Goalkeeper leg guards
- Goalkeeper blocking glove
- Goalkeeper catching glove

5.14 Goalkeeper's Helmet and Face Mask

5.14.1 All goalkeepers must wear a full-face mask with a hockey helmet, or a goalkeeper's full-face head protector. Goalkeeper's facemasks shall be constructed in such a way that the ball shall not get through it.

5.14.2 Should the helmet and/or face mask come off while play is in progress, the referees shall stop play.

5.14.3 If a goalkeeper removes his helmet and/or face mask in order to bring a stoppage in play in a breakaway situation, the referees shall award to the non-offending team a:

INFRINGEMENT: Penalty Shot (PS)

5.14.4 If a goalkeeper removes his helmet and/or face mask in order to bring a stoppage in play during a penalty shot, the referees shall award to the non-offending team a:

INFRINGEMENT: Goal

5.15 Goalkeepers' Leg Guards

5.15.1 The goalkeepers' leg guards shall not exceed **30.5 cm** wide when on the leg of the goalkeeper. A piece of any material covering the space between the pitch and the bottom of the leg guards in front of the skates are not permitted.

5.15.2 The goalkeeper's leg guards must be a minimum of **3 cm** in thickness.

5.15.3 Adhesive tape or thin adhesive sheeting may be applied to a goalkeeper's leg guards to protect them from wear and damage. Leg guards must still comply with rule 5.15.1 after applying the tape or thin sheeting. The tape or thin sheeting must be fastened

securely and must not peel off at any time. The tape or thin sheeting must not pose any threat to the venue and/or to other players. A referee may order the removal of the tape or thin sheeting if the referee finds the tape or thin sheeting not conforming to this rule at any time during the game.

5.15.4 Textile covers may be placed on a goalkeeper's leg guards to protect them from wear and damage. The covers must not increase the size of the leg guards significantly. Leg guards must still comply with rule 5.15.1 after applying the covers. Nothing must be placed in between the leg guards and the covers. The covers must not pose any threat to the venue and/or to other players. A referee may order the removal of the covers if the referee finds the covers not conforming to this rule at any time during the game.

5.16 Goalkeepers' Blocking Glove

5.16.1 The maximum outside dimensions of the protective padding attached to the back, forming part of a blocking glove, shall not exceed:

- **41 cm** in length
- **21 cm** in width

5.17 Goalkeeper's Catching Glove

5.17.1 The maximum outside dimensions of the catching glove shall not exceed:

- **41 cm** in length
- **23 cm** in width in any part of the wrist cuff which will have a minimum height of **11.5 cm**
- Distance from the heel along the pocket to the top of the T trap shall be no more than **48 cm**.

5.17.2 The perimeter of the catching glove shall not exceed **122 cm**.

5.18 Dangerous Objects

5.18.1 No player may wear or carry anything dangerous onto the pitch.

5.18.2 It is not permitted to wear objects that could be dangerous to any players. This includes, for instance, bracelets, watches, rings, visible piercing, necklaces or chains, earrings, or any other objects that could be dangerous. Flat rings, small earrings and visible piercing may be allowed, as long as they are taped over in such a way that they are no longer deemed dangerous to any player.

5.18.3 Metal objects other than that forming part of approved equipment is forbidden.

5.18.4 Players needing spectacles to play must use plastic or non-breakable lenses. The spectacles must be securely attached to the head, and full-face protection must be worn.

5.19 Uniforms

5.19.1 All players of each team shall wear identical jerseys, but these may not be black/white or black/grey and must be worn completely outside of the pants.

5.19.2 Players may wear either padded shorts and socks or girdle/padded shorts covered with long trousers.

5.19.3 For international matches all players in a team (except the goalkeepers) must all wear padded shorts and socks or all wear trousers.

5.19.4 For international Class A matches all players must also wear identical helmets and identical trousers/padded shorts and socks (except the goalkeepers).

5.19.5 In any game where in the opinion of the referee, the colours of the competing teams are so alike that there is a risk of a miscall by the referee, the away team or second named team on the match sheet must change their jerseys.

5.19.6 Each player in a team must wear an individual number **20 to 30 cm high** on the back of the jersey and **minimum 10 cm high** on both sleeves, halfway between the shoulder and the elbow. The number must be an integer within 1 to 99 inclusive.

INFRINGEMENT OF RULE 5.19:	**Disciplinary action by the National Member Association or the IISHF for international matches.**

6. Starting the Game

6.1 Starting Ends

6.1.1 The teams will start the game on the same end where their team bench is located (see 1.5.3).

6.1.2 Teams shall change ends for each period.

6.2 Face-Off

6.2.1 Face-offs are taken on the centre spot:

- To start a game,
- After a goal is scored,
- To start subsequent periods.

6.2.2 All other face-offs (unless provided for in these rules) shall be taken at the nearest face-off spot, or at a point on an imaginary line between a face-off spot at each end of the pitch and running parallel to the sides of the pitch, and at the point nearest to where the ball was last touched. No face-off shall take place closer to either goal than the goal area line.

6.2.3 During a face-off, two opposing players shall stand squarely facing their opponent's end of the pitch. Their sticks must be held with both hands and in front of their bodies. The blade of the stick must be touching the pitch. The blades of the sticks must be on the outside of the face-off spot.

6.2.4 All players must have both skates and the blade of the stick on their own side of an imaginary line running through the face-off spot, parallel to the goal line.

6.2.5 When a player has been removed from the face-off by a referee, another player of the same team must immediately proceed to the face-off spot and prepare for the face-off. When the other player delays taking up his proper position the referee shall issue a verbal warning and after that impose a minor penalty (2') on the offending player.

6.2.6 No movement of the players taking the face-off is allowed until the ball has touched the pitch. The ball must touch the pitch before it may be played by the players taking the face-off.

6.2.7 No other player is allowed within **3 m** of the players taking the face-off until the ball has been played.

INFRINGEMENT OF RULE 6.1:	**On the <u>first</u> occasion the referee will call for a change of player(s).** **In the <u>second</u> and subsequent instances a minor penalty (2') shall be given to the offending player.**

6.3 Pre-game warm-up

6.3.1 Both teams participating in a game are allowed to use the rink for a pre-game warm-up at least 15 minutes prior to the official start of the game. The warm-up period ends at least 5 minutes before the official start of the game.

6.3.2 The exact warm-up procedure is governed by the proper authorities for the game.

6.3.3 Both teams must only use their half of the rink to warm-up. In the case that only one team uses the warm-up period this team may use the full rink to warm-up.

7. Penalties

Penalties are divided into the following categories showing time to be served:

- Free-hit (FH)
- Minor penalty (2')
- Bench penalty (2')
- Major penalty (5')
- Misconduct penalty (10'; yellow card)
- Game misconduct penalty (GM; yellow and red card)
- Match penalty (MP; red card)
- Gross match penalty (GMP; black card)
- Penalty shot (PS)

All penalties except misconduct penalties shall be **real time** (actual playing time; see rule 8.25.9).

When at least one minor or major penalty (this includes major penalties as a direct consequence of a match or gross match penalty) is being served, the game clock must be stopped when the referee blows the whistle for a stoppage in play. If there are no penalties or only misconduct penalties being served the game clock will be operated as required by rules 8.25.5 or 8.25.6 for this game (see 8.25.9).

Penalties imposed after the end of the game shall be reported by the referee on the official game sheet.

Some rules state that the captain shall designate a player to serve a penalty. If the captain refuses to do so, the referee has the authority to impose the penalty on the captain.

The term '**short handed**' means that a team must be below the numerical strength of its opponents on the pitch due to penalties.

Penalty	Players		Goalkeepers		Remarks	
	Player out for	Served in the penalty box by	Goalkeeper out for	Served in the penalty box by	Recorded on Game Sheet	Note
Free Hit (FH)	-	-	-	-	-	-
Penalty Shot (PS)	-	-	-	-	-	-
Bench (2')	2 minutes	Any outfield player nominated by the captain	-	-	2 minutes	-
Minor (2')	2 minutes	Offender	-	Any outfield player nominated by the captain(*)	2 minutes	-
Major (5')	5 minutes	Offender	-	Any outfield player nominated by the captain(*)	5 minutes	-
Misconduct (10'; yellow card)	10 minutes	Offender	-	Any outfield player nominated by the captain(*)	10 minutes	-
Game Misconduct – automatic 2 x misconduct (GM)	Remainder of the game	No one	Remainder of the game	No one	10 minutes GM	-
Game Misconduct – automatic 2 x major (GM)	Remainder of the game	Any outfield player except the offender for 5 minutes	Remainder of the game	Any outfield player except the offender for 5 minutes(*)	5 minutes GM	-
Game Misconduct (GM)	Remainder of the game	No one	Remainder of the game	No one	GM	-
Match (MP; red card)	Remainder of the game	Any outfield player except the offender for 5 minutes	Remainder of the game	Any outfield player except the offender for 5 minutes(*)	MP	The player is suspended for 2 games
Gross Match (GMP; black card)	Remainder of the game	Any outfield player except the offender for 5 minutes	Remainder of the game	Any outfield player except the offender for 5 minutes(*)	GMP	The player is suspended until further notice

(*) player must have been on the pitch at the time of the incident

7.1 Free-hit

7.1.1 A player from the non-offending team shall take a free-hit from the position indicated by the referee.

7.1.2 A free-hit shall be taken at the face-off spot or at a point on an imaginary line between the face-off spots at each end of the pitch and running parallel to the sides of the pitch, at a point nearest to where the infringement occurred.

7.1.3 No free-hit shall take place closer to either goal than the goal area line.

7.1.4 The free-hit shall be taken within a maximum of **3 seconds** after the referee has blown the whistle.

INFRINGEMENT: Free-hit to the opposing team.

7.1.5 All players of the offending team must be a minimum of **3 m** from the ball until the ball is played. This includes all equipment especially sticks and skates.

INFRINGEMENT: In the <u>first</u> instance: a verbal warning and re-take the free-hit.
<u>Second and subsequent</u> instances: minor penalty (2') on offending player and re-take the free-hit.

7.1.6 The player taking the free-hit must play the ball with the stick and may not play the ball again until it has touched or been touched by another player of either team.

INFRINGEMENT: Free-hit to the opposing team.

7.1.7 All players of the non-offending team may be in any position on the pitch.

7.1.8 A goal may be scored directly from a free-hit.

7.2 Minor penalty (2 minutes)

7.2.1 For a minor penalty, the player on whom it has been imposed shall go to the penalty box and remain there for 2 minutes elapsed time on the game clock.

7.2.2 When a minor penalty has been imposed on a player (except on a delayed penalty) the player must not be replaced on the pitch. The team must play shorthanded.

7.2.3 If, while a team is shorthanded by one or more minor penalties, the opposing team scores a goal then the first imposed minor penalty shall automatically terminate.

This rule shall also apply if the goal was scored on a penalty shot (see rule 7.12.8 for exceptions).

Major penalties, misconduct penalties, match penalties and gross match penalties must always be served in full.

7.2.4 If a rule infringement results in both a minor penalty and a penalty shot then the minor penalty is cancelled if a goal is scored on the penalty shot.

7.3 Bench penalty (2 minutes)

7.3.1 For a bench penalty a player nominated by the captain of the team on which it has been imposed shall go to the penalty box and remain there for 2 minutes elapsed time on the game clock. All sections in rule 7.2 will apply accordingly.

7.4 Major penalty (5 minutes)

7.4.1 For a major penalty the player on whom it has been imposed shall go to the penalty box and shall remain there for 5 minutes elapsed time on the game clock. A major penalty must always be served in full.

7.4.2 When a Major penalty has been imposed on a player (except on a delayed penalty) the player must not be replaced on the pitch. The team must play shorthanded.

7.4.3 A game misconduct penalty must be imposed on any player receiving the second major penalty in a game (see 7.6).

7.5 Misconduct penalty (10 minutes; yellow card)

7.5.1 For a misconduct penalty (showing of a yellow card by the referee) the player on whom it has been imposed shall go to the penalty box and remain there for 10 minutes elapsed time on the game clock. A misconduct penalty must always be served in full.

7.5.2 A substitute player is permitted to go on to the pitch immediately replacing the player serving the misconduct penalty.

7.5.3 A player whose misconduct penalty has expired shall remain in the penalty box until the next stoppage of play.

7.5.4 When a player receives a minor or major penalty and in addition a misconduct penalty at the same time, the penalized team shall immediately put a substitute player in the penalty box and the player shall serve the minor or major penalty without change.

The substitute player must return to the pitch but only after the expiry of the minor or major penalty. The misconduct penalty shall start immediately after the expiry of the minor or major penalty. The offending player must remain in the penalty box during the whole duration of the minor or major penalty and the misconduct penalty.

7.5.5 A game misconduct penalty must be imposed on any player receiving the second misconduct penalty in a game (see 7.6).

7.6 Game Misconduct penalty (GM; yellow and red card)

7.6.1 A game misconduct penalty can **either** be directly imposed on a player or team official (the referee shows both a red **and** yellow card; in exceptional circumstances the referees may inform the offending team's captain or assistant captain verbally about the penalty) **or** automatically imposed on a player when they receive a second major penalty or second misconduct penalty. A game misconduct penalty can also be imposed on a player in combination with a major penalty (5’+GM).

7.6.2 A game misconduct penalty involves the suspension of a player for the remainder of the game and the offender must leave the playing area immediately. The player must not remain on or return to the players’ bench or to the spectator area or to any area surrounding the pitch.

7.6.3 For a second major penalty, the offending player must leave the playing area and a player nominated by the captain of that team must go to the penalty box and serve 5 minutes for the major penalty.

7.6.4 For a second misconduct penalty, the offending player must leave the playing area. A player from the same team must go directly on to the pitch to replace the penalized player.

7.6.5 If the non-playing manager, coach or any other bench official receives a game misconduct penalty, the official must immediately leave the playing area and must not return for the remainder of the game.

7.6.6 Any person incurring a game misconduct penalty is not allowed to take any further part in the remainder of the game, but shall not be suspended from playing in any further games. During a tournament a player who has received a game misconduct may play in the successive games.

7.7 Match penalty (MP; red card)

During a Game

7.7.1 A match penalty during a game (the referee shows a red card; in exceptional circumstances the referees may inform the offending team's captain or assistant captain verbally about the penalty) involves the suspension of the offender for the remainder of the game and the offender shall be ordered to the dressing room immediately. The player must not remain on or return to the players' bench or to the spectator area or any area surrounding the pitch.

For IISHF games, the player can neither play nor be on the team bench during his team's next two IISHF games. The player may then play again. For domestic games, the National Member Association's disciplinary rules on any further punishment will apply.

For IISHF games, the player will receive a fine from the IISHF. For domestic games the National Member Association's disciplinary rules on any further punishment will apply.

7.7.2 The penalized team shall immediately put a substitute player, nominated by the captain, in the penalty box and this player shall serve without change 5 minutes elapsed time on the game clock. These 5 minutes must always be served in full. If a player has received a minor or a major penalty as well as a red card penalty, the substitute player must serve both the minor or the major penalty and the red card penalty in succession.

7.7.3 If a team bench official receives a match penalty the official shall be ordered from the playing area immediately (the team will **not** incur a 5 minute penalty) and cannot return to the team bench for 2 further matches. The official may then return to the team bench.
For international games the team bench official will receive a fine from the IISHF. For domestic games the National Member Association's disciplinary rules and punishments will apply.

Off Pitch

7.7.4 A player or bench official who receives a match penalty off pitch will be suspended from taking part in the next 2 matches that the team plays. They may then return to their team and play again. The team will not incur a 5 minutes penalty.

For international games the player or team bench official will receive a fine from the IISHF. For domestic games the National Member Association's disciplinary rules and punishments will apply.

7.8 Gross Match penalty (GMP; black card)

During A Game

7.8.1 A gross match penalty (the referee shows a black card; in exceptional circumstances the referees may inform the offending team's captain or assistant captain verbally about the penalty) involves the suspension of a player for the remainder of the game and the offender shall be ordered to the dressing room immediately. The player must not remain on or return to the players' bench or to the spectator area or any area surrounding the pitch.

For IISHF games, the player cannot play or be on the team bench in any further IISHF games until the proper authorities have dealt with the player's case (disciplinary proceedings). For domestic games, the National Member Association's disciplinary rules on any further punishment will apply.

For IISHF games the player will receive a fine from the IISHF and possible suspension for a period of time. For domestic games the National Member Association's disciplinary rules and punishments will apply.

7.8.2 The penalized team shall immediately put a substitute player, nominated by the captain, in the penalty box and the player shall serve without change 5 minutes elapsed time on the game clock. These 5 minutes must always be served in full. If a player has received a minor or a major penalty as well as a black card penalty, the substitute player must serve both the minor or the major penalty and the black card penalty in succession.

7.8.3 If a team bench official receives a gross match penalty he/she shall be ordered from the playing area immediately and may not return until the proper authorities have dealt with the official's case (disciplinary proceedings). The team will not incur a 5-minute penalty.

For international games the bench official will receive a fine from the IISHF and possible suspension for a period of time. For domestic games the National Member Association's disciplinary rules and punishments will apply.

Off Pitch

7.8.4 A player or bench official who receives a gross match penalty off pitch will be suspended from playing or taking part in any game until such time as the proper authorities have dealt with the official's case (disciplinary proceedings). The team will not incur a 5-minute penalty.

For international games the player will receive a fine from the IISHF and possible suspension for a period of time. For domestic games the National Member Association's disciplinary rules and punishments will apply.

7.9 Goalkeepers Penalty Procedure

A goalkeeper never goes to the penalty box.

7.9.1 For a minor, the first major or the first misconduct penalty assessed to the goalkeeper, the goalkeeper continues to play. His penalty shall be served by another player of his team who was on the pitch at the time the play was stopped. The player is appointed by the team captain.

7.9.2 For a game misconduct, match or gross match penalty, the goalkeeper shall be ruled off the pitch for the remainder of the game. He shall be replaced by the substitute goalkeeper, if available, or otherwise by a member of his team, who shall be permitted 10 minutes to dress in the goalkeeper's full equipment.

7.9.3 In case of a game misconduct (second major penalty), match or gross match penalty the 5 minute penalty shall be served by another player of his team who was on the pitch at the time the play was stopped. The player is appointed by the team captain.

7.9.4 When a goalkeeper is assessed more than one minor or major penalty at the same stoppage of play, one player of his team who was on the pitch at the time the play was stopped shall serve these penalties (provided that the player did not incur penalties himself). The player must be appointed by the captain.

7.9.5 If a goalkeeper is assessed both a minor or major penalty and misconduct penalty at the same stoppage of play, one player who was on the pitch at the time game was stopped must serve the minor penalty and a second player who was also on the pitch at the time game was stopped must serve both penalties consecutively. Both players must be appointed by the captain.

7.10 Outstanding Time Penalties

7.10.1 All outstanding penalties at the end of any period of play shall continue into the next period.

7.10.2 Where the rules of the competition require periods of extra time, all outstanding penalties shall continue in to the next period of extra time.

7.10.3 Players with outstanding penalties at the end of a game (including extra time) are not allowed to take part in a penalty shoot-out.

7.11 Leaving the Penalty Box

7.11.1 All players leaving the penalty box, having served a penalty, must go directly and immediately onto the pitch.

INFRINGEMENT: Minor penalty (2') on offending player

7.11.2 Players serving a penalty may return to their team bench during a period break but must return to the penalty box before the game re-starts.

INFRINGEMENT: Minor penalty (2') on offending player

7.11.3 Players must not leave the penalty box and return to the pitch until their penalty has elapsed or been terminated.

INFRINGEMENT: Minor penalty (2') on offending player

7.11.4 Players serving a penalty must sit quietly in the penalty box and may not speak to anyone except the game officials.

INFRINGEMENT: Misconduct penalty (10'; yellow card), game misconduct penalty (GM) or in severe cases match penalty (MP; red card) or gross match penalty (GMP; black card)

7.11.5 No player may leave the penalty box when there is a dispute on the pitch except when the penalty time has elapsed

INFRINGEMENT: Match penalty (MP; red card) or gross match penalty (GMP; black card)

7.11.6 Players serving a penalty must keep jerseys on at all times and they must be completely kitted up early enough to leave the penalty box when their penalty has elapsed.

INFRINGEMENT: Misconduct penalty (10'; yellow card)

7.12 Penalty Shot

7.12.1 The game clock must be stopped during any penalty shot.

7.12.2 A penalty shot will always be taken by one outfield player of the non-offending team and one goalkeeper of the offending team. The offending team is required to put a goalkeeper in the goal.

INFRINGEMENT: If the offending team has no player completely kitted up in goalkeeper equipment (rules 5.10 - 5.17): automatic Goal (rule 8.28.7 will not apply).

If the offending team has at least one fully kitted up goalkeeper available and refuses to put that goalkeeper in the goal: this will be considered a refusal to continue the game (8.18.2).

7.12.3 Any player of the non-offending team except goalkeepers and players in the penalty box may take a penalty shot.

7.12.4 The penalty shot will start after the ball is placed on the centre spot and the referee blows the whistle.

INFRINGEMENT: On the <u>first</u> occasion: Repeat the penalty shot.

On the <u>second</u> occasion: Face-off at the face-off spot nearest the attacking team's goal (penalty shot disallowed).

7.12.5 The penalty taker has **10 seconds** from first touching the ball to completing the shot at the goal.

INFRINGEMENT: Face-off at the face-off spot nearest the attacking team's goal (penalty shot disallowed).

7.12.6 The defending goalkeeper must remain within the goalkeeper's own goal crease until the penalty taker touches the ball. In the event of an infringement the referee will raise an arm in the air (delayed call of penalty).

INFRINGEMENT: On the first occasion: Continue the penalty shot and repeat if a goal is not scored.

On the second occasion: Minor penalty (2') on the goalkeeper and repeat penalty shot if a goal is not scored.

On the third occasion: Goal automatically awarded if a goal is not scored.

7.12.7 Once the penalty taker has touched the ball the goalkeeper may advance but must remain behind the goal area line. In the event of an infringement the referee will raise an arm in the air (delayed call of penalty)

INFRINGEMENT: On the first occasion: Continue the penalty shot and repeat if a goal is not scored.

On the second occasion: Minor penalty (2') on the goalkeeper and repeat penalty shot if a goal is not scored.

On the third occasion: Goal automatically awarded if a goal is not scored.

7.12.8 Penalties according to 7.12.6, 7.12.7 or 8.10 against the goalkeeper that are signalled during the execution of the penalty shot will not be cancelled if the penalty results in a goal. Rule 7.9.1 applies accordingly. The player serving the penalty is appointed by the captain of the offending team (the captain can select any outfield player in this case) and has to go to the penalty bench immediately.

In case of a delayed call of penalty during the penalty shot, the penalty shot will be repeated if no goal is scored. The aforementioned penalty procedure applies to the repetition of the penalty shot accordingly.

7.12.9 The goalkeeper may attempt to stop the shot in any manner within these rules, except by throwing the stick or any other object in which case **a goal shall be awarded**. The goalkeeper will be penalized according to rule 8.6.1.

If an object or a stick is thrown onto the pitch from the opposing team's players' bench the referees will act according to rule 8.6.1 **and will also award an automatic goal**.

7.12.10 The penalty taker must remain between the centre line and the goal line and proceed towards the opponent's goal; the player must not turn through 360 degrees to cross the player's own track.

INFRINGEMENT: Face-off at the face-off spot nearest the attacking team's goal (penalty shot disallowed).

7.12.11 Once the ball has been shot, the play shall be considered complete. No goal can be scored by a second shot from a rebound of any kind.

7.12.12 All players except the defending goalkeeper and the penalty taker must remain on the players' bench, until the penalty has been completed. In the event of an infringement the referee will raise an arm in the air (delayed call of penalty).

INFRINGEMENT: By the defending team when a goal has been scored: No penalty.

By the defending team when a goal has not been scored: Re-take the penalty shot.

By the attacking Team: Face-off at the face-off spot nearest the attacking team's goal (penalty shot disallowed).

7.12.13 A penalty shot is finished when:

- A goal is scored.
- The goalkeeper saves the ball.
- The ball crosses the goal line.
- A third infringement under 7.12.6 or 7.12.7 occurs.
- 10 seconds has elapsed.
- An infringement of rule 7.12.10.

7.12.14 When a goal is scored from a penalty shot, play will restart from the centre spot with a face-off.

7.12.15 When a penalty shot is saved or misses the goal, play will re-start with a face-off from one of the face-off spots adjacent to the defending goal.

7.12.16 When the end of a period is signalled and a penalty shot has been awarded, the penalty shot shall be completed before the time signal is observed.

7.13 Delayed Penalties

7.13.1 If a third player of any team is penalized with a minor, major, game misconduct, match or gross match penalty (nominated player), while two players of the same team are serving one of these penalties, the penalty time of the third player shall not start until the penalty time of one of the two penalized players shall has elapsed.

The third player must immediately proceed to the penalty box but may be replaced on the pitch by a substitute player.

7.13.2 The sequence for operating delayed penalties is as follows:

- When the penalty time of one of the two penalized players has elapsed, then the penalty time of the third penalized player starts. When the first penalized player's time has elapsed, at the next stoppage of play the player may return to the player's team. The game will re-start with three players (one goalkeeper and two outfield players or three outfield players). In case there is no stoppage of play, the player has to remain on the penalty bench until the next stoppage of play or until the second penalty has elapsed.

- When the next penalty time has elapsed then the player whose time has elapsed may return to the pitch.
  If the player whose penalty has elapsed first is still on the penalty bench because there has not been a stoppage of play that would have allowed the player to leave the penalty bench, this player returns to the pitch instead. The player whose penalty has elapsed second must remain on the penalty bench until the next stoppage of play where he can return to the player's bench or until the third penalty has elapsed.

- When the third penalty time has elapsed then the player may return to the pitch.
  If the player whose penalty has elapsed second is still on the penalty bench because there has not been a stoppage of play that would have allowed the player to leave the penalty bench, this player returns to the pitch instead. The player whose penalty has elapsed third must remain on the penalty bench until the next stoppage of play where he can return to the player's bench.

- If the opposing team scores goal while all three players are still in the penalty box and if the team is shorthanded and none of the penalized players' times have elapsed, the player who is serving the first minor penalty may return to the team. The game will restart with three players (one goalkeeper plus two outfield players or three outfield players). If only the third player is serving a minor penalty the player may not return to the

player's team: the penalty time does not start until the time of one of the other two players' penalties has elapsed.

- If the opposing team scores a goal while all three players are still in the penalty box and if the team is shorthanded and one of the penalty times has already elapsed, the player whose time has already elapsed and the player whose minor penalty shall be the next to elapse shall return to the pitch. The game will re-start with four players (one goalkeeper plus three outfield players or four outfield players).

This rule also applies for any subsequent player penalized with a major or match penalty.

7.14 Sequence of Penalties

7.14.1 Penalties imposed at the same time shall start in the sequence announced by the referee. The timekeeper must record this sequence on the match sheet.

7.14.2 Delayed penalties will be called in the exact sequence as they occurred during the game play. Minor penalties will always be called before major penalties.

7.15 Calling of Penalties

7.15.1 When a player of the team in possession of the ball commits an infringement of the rules, which would call for a penalty (except for a misconduct penalty), the referee shall immediately blow the whistle and give the penalty against the offending team.

7.15.2 When a player of the team not in possession of the ball commits an infringement of the rules that would call for a free-hit penalty, the referee shall blow the whistle **ONLY** if the non-offending team loses control of the ball as a direct result of the infringement.

7.15.3 When a player of the team not in possession of the ball commits an infringement of the rules, which would call for a minor or major penalty, the referee shall signify the calling of the penalty by raising an arm. On completion of the play (as defined below) by the team in possession of the ball, the referee will immediately blow the whistle and give the penalty against the offending player.

"Completion of the play by the team in possession of the ball" in this rule means that the ball must have come into the possession and control of, or intentionally played by an opposing player, or the ball has been frozen or a goal has been scored. This does not mean a rebound off the goalkeeper, the boards, or the goal or any accidental contact with the body or equipment of an opposing player.

7.15.4 Where a referee has signalled a delayed call of penalty according to rule 7.15.3 and there is a second infringement of the rules (except a misconduct penalty), the referee will immediately blow the whistle and award the penalties.

7.15.5 Where the same player causes the second infringement of the rules, the referee will give both penalties to the offending player; these penalties must be served in succession beginning with minor penalties.

7.15.6 Should an infringement of the rules call for a direct game misconduct penalty, a major penalty (5') plus a game misconduct penalty, a match penalty or a gross match penalty, the referee shall immediately stop the game and give the penalty against the offending player.

7.15.7 After a penalty is given, the game shall re-start with a face-off unless otherwise provided for in these rules (see 7.1.5).

a) If one or more minor (2'), major (5'), misconduct (10'), direct game misconduct, major (5') plus game misconduct, match or gross match penalties are given to one team, the next face-off will be taken at one of the face-off spots in front of the offending team's goal. The exact face-off spot is decided by the referee.

b) If at least one minor (2’), major (5’), misconduct (10’), direct game misconduct, major (5’) plus game misconduct, match or gross match penalty is given to each team during the same stoppage of play, the face-off will be taken at the point nearest to where the ball was last touched according to rule 6.2.2.

7.15.8 If the non-offending team scores a goal during the signalling of a **delayed minor penalty**, the goal is allowed and the delayed penalty is cancelled. All other penalties are imposed.

If the offending team already is short-handed, a delayed minor penalty is cancelled but all other penalties being served remain. A delayed major penalty is not cancelled in this case but 7.2.3 may apply accordingly.

All other penalties that players may have received during the same play are imposed.

A minor penalty that has been cancelled based on this rule must yet be recorded on the match sheet.

7.15.9 No goal can be scored against the non-offending team during the signalling of a delayed call of penalty. This includes possible own goals scored by the non-offending team.

7.15.10 Should an infringement of the rules call for a misconduct penalty, the game shall not be stopped immediately, nor shall a delayed call of penalty be used. The misconduct penalty will be imposed at the next stoppage of play unless the player is not wearing the correct equipment. In this case, the referee shall blow the whistle and stop the game only if the non-offending team loose possession of the ball or if it is not safe to continue.

8. Playing Rules

8.1 Ball out of Sight and Illegal Ball

8.1.1 Whenever a ball is out of sight of the referee, the referee must blow the whistle and immediately stop the play. The ball shall then be faced off at a point on the imaginary line nearest to where the play was stopped unless otherwise provided for in these rules.

8.1.2 If at any time a ball other than the ball legally in play shall appear on the pitch, the play shall not be stopped provided that the play is not disturbed by the second ball, but shall continue with the legal ball until the play then in progress is completed by a change of team possession. If the play is disturbed, the referee shall blow the whistle to stop the play and retrieve the illegal ball. The legal ball shall then be faced off at the point where the legal ball was last touched.

8.2 Ball touching referee

8.2.1 If the ball touches the referee, or the referee gets in the way of a player in possession of the ball, and if as a result of this, the referee considers that one team has gained an unfair advantage then the referee shall order a face-off. The face-off shall be taken at a point nearest to where the ball was last touched by a player, unless within the goal area, then at the nearest face-off spot.

8.3 Ball unplayable

8.3.1 When the ball becomes accidentally caught in the goalkeepers padding, the referee shall stop the game immediately and order a face-off.

8.3.2 When the ball becomes caught in the goal cage, or any other static equipment, the referee shall stop the game immediately and order a face-off.

8.4 Broken Sticks

8.4.1 If any player should break their stick, whatever the reason, they must drop the stick immediately and leave all parts of the broken stick on the pitch for the referee to remove. The player may obtain a new stick from the players' bench, or may play without a stick until the next stoppage of play, or may leave the game for substitution.

INFRINGEMENT: Minor penalty (2')

8.4.2 If a goalkeeper should break their stick, the goalkeeper must drop the stick immediately and leave all parts of the broken stick for the referee to remove. The goalkeeper can go to the team bench to obtain a replacement stick or may play without a stick until the next stoppage.

Alternatively an outfield player may give the goalkeeper a stick from their own team. The outfield player can then obtain a replacement stick from the team bench (not a goalkeeper's stick). At the next stoppage the goalkeeper must go to the team bench to obtain a replacement goalkeeper stick.

INFRINGEMENT: Minor penalty (2')

8.4.3 Throwing a new stick to a player who has broken their stick is forbidden.

INFRINGEMENT: Minor penalty (2') on the person who threw the stick, or if the offender is unknown a bench penalty (2') shall be assessed to the offending team.

8.4.4 No player may play with a stick, which has been thrown on to the pitch.

INFRINGEMENT: Minor penalty (2')

8.5 Dropped Sticks

8.5.1 A player (including a goalkeeper) who drops (except a broken stick) the stick must retrieve it as soon as possible but is able to take an active part in the game until the stick is retrieved. The player is not allowed to obtain a second stick from the player's bench but may leave the game for substitution. The stick must be retrieved during the next stoppage of play.

Note: An outfield player may, as long as they take no active part in the game in progress, pick up a dropped goalkeeper's stick to return it to his goalkeeper without delay, without incurring a penalty.

INFRINGEMENT: Minor penalty (2')

8.6 Throwing of Sticks

8.6.1 No player or team official may throw a stick or any other object in the direction of the ball, at an opposing player or onto the pitch in general.

INFRINGEMENT: By a player: Major penalty (5').

By a team official: Match penalty (MP; red card).

If in the opinion of the referee, the player or team official has deliberately attempted to cause injury by this action: Gross match penalty (GMP; black card).

8.7 Early Termination of the Game

8.7.1 The referee has the power to terminate a game before full time, if in the referee's opinion it would be dangerous or impossible to allow play to continue on the pitch. To reach a decision on the outcome of the game and any further action needed, a full report must be made by the referees and forwarded to:

- For international Class A events: the IISHF,
- For all other events: the National Member Association or National Member Association approved committee.

8.8 Playing while lying on the pitch

8.8.1 It is permitted for an outfield player to play the ball while lying on the pitch. The player is allowed to stop the ball with any part of the body except the feet and may only play the ball with the stick.

INFRINGEMENT: Free-hit or if there is a real chance of a goal being scored: Penalty shot.

8.9 Fair Body Contact

8.9.1 Fair body contact (fair check) is that which is delivered with the side or the front of the body, with the arms down, close to the body and both skates on the pitch surface. A fair check can only be made on an opponent who is in possession of the ball, and can only be made to the front or to the side of that opponent.

INFRINGEMENT: Penalties according to rule 8.10.

8.9.2 Fair body contact is not allowed in the age groups U10, Veterans and Masters.

Exemptions from the selected age groups specified in rule 8.9.2 are only permissible upon application to the IISHF with regard to international matches, or to the National Member Association with regard to all other (domestic) games.

INFRINGEMENT: Minor Penalty (2'). All other infringements will be penalized according to rule 8.10.

8.10 Foul Play

In the following a "**Breakaway**" shall be defined as a situation when a player is in full control of the ball and the ball has crossed the centre line into the **Attacking Zone** and has no opposing player between himself and the opposing goalkeeper, or goal if the goalkeeper has been removed.

"**Control of the ball**" is the act of pushing or moving the ball with the stick. If another player or player's equipment touches the ball while it is being pushed or moved, or the ball hits the goal or the ball goes free, the player shall no longer be considered to be in control of the ball.

If in the opinion of the referee, the offending player, has **deliberately attempted to injure** the other player an immediate match penalty (MP; red card) must be given or in severe cases a gross match penalty (MP; black card) must be given.

Certain rules allow the referees to base their discretion on the **recklessness** of an action. Such assessment of **reckless endangerment** shall be based on the severity of the infraction, severity of the contact, the degree of violence and the general reprehensibility involved.

Where a player in a **real scoring position** is prevented from scoring as a result of an infringement, the referee shall award a penalty shot in addition to any other penalty.

8.10.1 INTERFERENCE

a) A player who interferes or impedes the progress of an opponent who is not in possession of the ball must be given a:

- ► Minor penalty (2')

b) A player who, by means of the stick or body, interferes with or impedes the progress of the goalkeeper while the goalkeeper is in the goal crease must be given a:

- ► Minor penalty (2')

8.10.2 CHARGING

"**Charging**" shall mean the action of a player who, as a result of distance travelled, violently checks an opponent. Charging may be the result of a check into the boards, into the goal frame or on open pitch.

A player, who makes physical contact with an opponent after the whistle has been blown, and if, in the opinion of the referee, the player had sufficient time after the whistle to avoid such contact, shall be given, at the discretion of the referee, a penalty for "Charging".

Checking an opponent using the **hips** will be considered "Charging" and penalized accordingly.

A goalkeeper is not "Fair Game" just because the goalkeeper is outside of the goal crease. A penalty for "Interference" or "Charging" shall be called in every case where an opposing player makes unnecessary contact with a goalkeeper.

a) A player who runs, jumps or charges an opponent or who runs, jumps or charges the opposing goalkeeper in the goal crease shall be given, at the discretion of the referee, a:

- ► Minor penalty (2')

or

- ► Major penalty (5’)

b) A player who injures or recklessly endangers an opponent as a result of charging shall be given, at the discretion of the referee, a:

- ► Major penalty (5’)

or

- ► Major penalty and game misconduct penalty (5’+GM)

or

- ► Match penalty (MP; red card)

or

- ► Gross match penalty (GMP; black card)

8.10.3 **FIGHTING/ROUGHING**

Both parties can be given an appropriate penalty according to this rule.

a) A player using unnecessary roughness shall be given, at the discretion of the referee, a:

- ► Minor penalty (2’)

or

- ► Major penalty (5’)

or

- ► Major penalty and game misconduct penalty (5’+GM)

b) A player who grabs or holds the face mask or helmet or pulls the hair of an opponent shall be given, at the discretion of the referee, a:

- ► Major penalty (5’)

or

- ► Major penalty and game misconduct penalty (5’+GM)

c) A player who intentionally takes off the glove(s) in a fight shall be given a:

- ► Misconduct penalty (10’; yellow card)

d) A player who starts a fight shall be given a:

- ► Match penalty (MP; red card)

or

- ► Gross match penalty (GMP; black card)

e) A player who, having been struck, retaliates with a blow or attempted blow, shall be given a:

- ► Minor penalty (2’)

or

- ► Major penalty (5’)

or

- ► Major penalty and game misconduct penalty (5’+GM)

f) Any player or goalkeeper who is the first to intervene in a fight already in progress, shall be given - in addition to any other penalties incurred in the incident - a:

- ► Major penalty and game misconduct penalty (5’+GM)

g) If excessive violence is used, players shall be penalized according to rule 8.16.12.

8.10.4 **CROSS CHECKING**

A “**Cross-check**” is a check delivered with both hands on the stick and no part of the stick is on the pitch.

a) A player who cross-checks an opponent shall be given, at the discretion of the referee, a:

- ► Minor penalty (2’)

or
- Major penalty (5’)

b) A player who injures or recklessly endangers an opponent by cross-checking shall be given, at the discretion of the referee, a:

- Major penalty (5’)

or
- Major penalty and game misconduct penalty (5’+GM)

or
- Match penalty (MP; red card)

or
- Gross match penalty (GMP; black card)

8.10.5 **HOLDING**

Any action by a player or goalkeeper that prevents the progress of an opposing player by using hands, stick or arms is considered holding.

a) A player who holds an opponent with the hands, stick or arms, or in any other way, shall be given a:

- Minor penalty (2’)

b) A players who holds an opponent’s stick with the hands, or in any other way, shall be given a:

- Minor penalty (2’)

c) In a breakaway situation, when a player, in control of the ball outside the player’s defending zone with no opponent to pass other than the goalkeeper, is held from behind, thus preventing a reasonable scoring opportunity, the referee shall in addition award to the non-offending team, a:

- Penalty Shot (PS)

d) If, when the opposing goalkeeper has been removed from the pitch, and the player in control of the ball is outside the player’s defending zone, with no opponent to pass between the player and the opposing goal, is held from behind, the referee shall in addition to the penalty award to the non-offending team, a:

- Goal

The position of the ball shall be the determining factor. The ball must have fully crossed the centre line into the **Attacking Zone** in order to award a penalty shot or a goal.

8.10.6 **SPEARING**

Spearing shall mean stabbing an opponent with the point of the stick blade, whether contact is made or not.

a) A player who attempts to spear an opponent must be given a:

- Major penalty (5’)

b) A player who spears an opponent must be given, at the discretion of the referee, either a:

- Major penalty and game misconduct penalty (5’+GM)

or
- Match penalty (MP; red card)

or
- Gross match penalty (GMP; black card)

c) A player who injures an opponent as a result of a spearing must be given a

- Gross match penalty (GMP; black card)

8.10.7 **SLASHING**

Slashing shall mean the act of a player or goalkeeper who swings the stick at an opponent, whether contact is made or not. Any forceful or powerful chop with the stick on an opponent's body, the opponent's stick, on or near the opponent's hands that, at the discretion of the referee, is not an attempt to play the ball, shall be penalized as slashing.

a) A player who impedes or seeks to impede the progress of an opponent by slashing with the stick shall be given, at the discretion of the referee, a:

- ► Minor penalty (2')

or

- ► Major penalty (5')

b) A player who injures or recklessly endangers an opponent by slashing shall be given, at the discretion of the referee, a:

- ► Major penalty (5')

or

- ► Major penalty and game misconduct penalty (5'+GM)

or

- ► Match penalty (MP; red card)

or

- ► Gross match penalty (GMP; black card)

c) A player who swings the stick at another player in the course of any incident shall be given, at the discretion of the referee, a:

- ► Major penalty and game misconduct penalty (5'+GM)

or

- ► Match penalty (MP; red card)

or

- ► Gross match penalty (GMP; black card)

d) In a breakaway situation, when a player, in control of the ball outside the player's defending zone with no opponent to pass other than the goalkeeper, is slashed from behind, thus preventing a reasonable scoring opportunity, the referee shall in addition award to the non-offending team, a:

- ► Penalty Shot (PS)

e) If, when the opposing goalkeeper has been removed from the pitch, and the player in control of the ball is outside the player's defending zone, with no opponent to pass between the player and the opposing goal, is slashed from behind, the referee shall in addition to the penalty award to the non-offending team, a:

- ► Goal

The position of the ball shall be the determining factor. The ball must have fully crossed the centre line into the **Attacking Zone** in order to award a penalty shot or a goal.

8.10.8 TRIPPING

A player or goalkeeper shall not place the stick, knee, foot, arm, hand or elbow in such a manner that it causes an opponent to trip or fall.

If, in the opinion of the referee, a player makes contact with the ball first and subsequently trips the opponent in so doing, no penalty shall be imposed.

a) A player who places the stick, leg, foot, arm, hand or elbow in such a manner that it shall cause an opponent to trip or fall shall be given, at the discretion of the referee, a:

- ► Minor penalty (2')

or

- ► Major penalty (5')

b) A player who injures or recklessly endangers an opponent by tripping shall be given, at the discretion of the referee, a:

- Major penalty (5')

or

- Major penalty and game misconduct penalty (5'+GM)

or

- Match penalty (MP; red card)

or

- Gross match penalty (GMP; black card)

c) In a breakaway situation, when a player, in control of the ball outside the player's defending zone with no opponent to pass other than the goalkeeper, is tripped from behind, thus preventing a reasonable scoring opportunity, the referee shall in addition award to the non-offending team, a:

- Penalty Shot (PS)

d) If, when the opposing goalkeeper has been removed from the pitch, and the player in control of the ball is outside the player's defending zone, with no opponent to pass between the player and the opposing goal, is tripped from behind, the referee shall in addition to the penalty award to the non-offending team, a:

- Goal

The position of the ball shall be the determining factor. The ball must have fully crossed the centre line into the **Attacking Zone** in order to award a penalty shot or a goal.

8.10.9 HOOKING

Hooking is the act of a player or goalkeeper using the stick in a manner that impedes or prevents the progress of an opponent.

a) A player who impedes or seeks to impede the progress of an opponent by hooking the player with the stick shall be given, at the discretion of the referee, a:

- Minor penalty (2')

or

- Major penalty (5')

b) A player who injures or recklessly endangers an opponent by hooking shall be given, at the discretion of the referee, a:

- Major penalty (5')

or

- Major penalty and game misconduct penalty (5'+GM)

or

- Match penalty (MP; red card)

or

- Gross match penalty (GMP; black card)

c) In a breakaway situation, when a player in control of the ball outside the player's defending zone has no opponent to pass other than the goalkeeper and the player is hooked from behind, thus preventing a reasonable scoring opportunity, the referee shall in addition award to the non-offending team, a:

- Penalty Shot (PS)

d) If, when the opposing goalkeeper has been removed from the pitch, and the player in control of the ball outside of the player's defending zone is hooked with no opposition between the player and the opposing goal, thus preventing a reasonable scoring opportunity, the referee shall in addition to the penalty award to the non-offending team, a:

- Goal

The position of the ball shall be the determining factor. The ball must have fully crossed the centre line into the **Attacking Zone** in order to award a penalty shot or a goal.

8.10.10 HIGH STICKING

A "High Stick" is one that is carried above the height of the player's shoulders. Players and goalkeepers must at all times be in control of, and responsible for, their stick.

a) A player who carries or holds the stick, or any part of it, above the height of the player's shoulders and that makes contact with a player or official shall be given, at the discretion of the referee, a:

- Minor penalty (2')

or

- Major penalty (5')

b) A player who injures or recklessly endangers an opponent or an official as a result of High Sticking shall be given, at the discretion of the referee, a:

- Major penalty (5')

or

- Major penalty and game misconduct (5'+GM)

or

- Match penalty (MP; red card)

or

- Gross match penalty (GMP; black card)

c) No player may play or attempt to play the ball above shoulder height with any part of the stick.

- Free-hit only if the non-offending team loses control of the ball as a direct result of the infringement (rule 7.15.2).
- If a real scoring opportunity has been impeded: Penalty Shot (PS) instead of a free hit.

8.10.11 ELBOWING

Elbowing shall mean striking or attempting to strike an opponent by the use of the elbow.

a) A player who uses the elbow to foul an opponent shall be given, at the discretion of the referee, a:

- Minor penalty (2')

or

- Major penalty (5')

b) A player who injures or recklessly endangers an opponent by elbowing shall be given, at the discretion of the referee, a:

- Major penalty (5')

or

- Major penalty and game misconduct penalty (5'+GM)

or

- Match penalty (MP; red card)

or

- Gross match penalty (GMP; black card)

8.10.12 CHECKING FROM BEHIND

A check from behind is a check delivered on a player who is not aware of the impending hit and is unable to protect himself and contact is made on the back part of the body. A check or a push in the back of a player that cannot be categorized as checking from behind may still be penalized according to rule 8.10.

However, if a player intentionally turns the body to create contact, this shall not be classified as a check from behind.

a) A player who body checks or hits an opponent from behind in any manner shall be given a:

- ► Major penalty (5')

b) A player who injures or recklessly endangers an opponent as a result of checking from behind shall be given, at the discretion of the referee, a:

- ► Major penalty and game misconduct (5'+GM)

or

- ► Match penalty (MP; red card)

or

- ► Gross match penalty (GMP; black card)

8.10.13 **BOARDING**

A boarding penalty shall be imposed on any player or goalkeeper who checks an opponent in such a manner that causes the opponent to be thrown violently into the boards.

a) A player must not body check, elbow, charge or trip an opponent in such a manner that it causes the opponent to be thrown violently into the boards and must be given a:

- ► Minor penalty (2')

or

- ► Major penalty (5')

b) A player who injures or recklessly endangers an opponent as a result of boarding must be given, at the discretion of the referee, a:

- ► Major penalty (5')

or

- ► Major penalty and game misconduct (5'+GM)

or

- ► Match penalty (MP; red card)

or

- ► Gross match penalty (GMP; black card)

8.10.14 **BUTT-ENDING**

Butt-ending is the action by which a player or goalkeeper uses the shaft of the stick, above the upper hand, to check or attempt to check an opposing player in any manner.

a) A player who attempts to butt-end an opponent must be given a

- ► Major penalty (5')

b) A player who butt-ends an opponent must be given, at the discretion of the referee, a:

- ► Major penalty and game misconduct (5'+GM)

or

- ► Match penalty (MP; red card)

or

- ► Gross match penalty (GMP; black card)

c) A player who injures an opponent as a result of a butt-ending must be given a

- ► Gross match penalty (GMP; black card)

8.10.15 **KNEEING**

Kneeing is the action by which a player or goalkeeper uses or attempts to use his knee to make contact with an opponent.

a) A player who uses the knee to foul an opponent must be given a:

- ► Major penalty (5')

b) A player who injures or recklessly endangers an opponent as a result of kneeing must be given a:

- ► Major penalty and game misconduct (5'+GM)

or

- ► Match penalty (MP; red card)

or

- ► Gross match penalty (GMP; black card)

8.10.16 **HEAD-BUTTING**

Head-butting is the act by which a player or goalkeeper makes intentional contact or attempts to make contact with an opponent with head and/or helmet.

a) A player who attempts to head-butt an opponent must be given a:

- ► Match penalty (MP; red card)

b) A player who deliberately head-butts an opponent must be given a:

- ► Gross match penalty (GMP; black card)

8.10.17 **CHECKING TO HEAD AND NECK AREA**

a) A player who directs a check or blow, with any part of the body, to the head and neck area of an opponent must be given a:

- ► Major penalty (5')

b) A player who injures or recklessly endangers an opponent as a result of a check to the head and neck area must be given a:

- ► Major penalty and game misconduct (5'+GM)

or

- ► Match penalty (MP; red card)

or

- ► Gross match penalty (GMP; black card)

c) Blows to the head and neck area during a fight are covered by and will be penalized according to rule 8.10.3.

8.10.18 **KICKING**

a) A player who kicks or attempts to kick another player, shall be given a:

- ► Gross match penalty (GMP; black card)

b) Any player who uses his leg or foot to knock or kick an opponent's feet from under him, or pushes an opponent's upper body backward with an arm or elbow, and at the same time with a forward motion of his leg, knocks or kicks the opponent's feet from under him, causing him to fall violently to the surface, shall be assessed a:

- ► Gross match penalty (GMP; black card)

8.10.19 **DIVING**

Any player trying to provoke a penalty by falling deliberately or dramatizes a penalty situation or simulates an injury to have an opponent penalized, shall be assessed a:

- ► Minor penalty (2')

8.10.20 **DELAYING THE GAME**

a) No player may freeze the ball for more than 3 seconds with the stick, skates or body, in such a manner as to cause a stoppage in play unless they are being tackled. No player may deliberately fall on the ball to cause a stoppage in play or to take the ball out of the game.

- ► Free-hit, except if the player was in a real scoring position or in the last two minutes of the game or the last two minutes of overtime, then penalty shot.

b) When a goal cage becomes displaced by accident and the play is away from the goal area, the referee shall re-position the goal cage without stopping the game. If the play is in or near the goal area, the game shall be stopped to re-position the goal cage and the game re-started with a face-off.

c) No defending player shall deliberately displace their own goal cage.

- ► Minor penalty (2')
- ► If an opposing player is in a real scoring position then penalty shot in addition (exception rule 8.10.20 d) automatic goal given).
- ► If the offence occurs in the last two minutes of the game or the last two minutes of overtime: penalty shot in addition to the minor penalty (exception rule 8.10.20 d)).

d) When a defending player deliberately displaces their own goal cage and the ball misses the goal cage instead of a goal being scored, then a goal shall be awarded by the referee in addition to the minor penalty.

e) No player shall deliberately displace the opposing goal cage in order to provoke a stoppage of play.

- ► Minor penalty (2')

f) No player shall directly shoot the ball (unless deemed a shot on goal), hit the ball with the stick or hand, throw the ball over the boards, or hit the ball at the ceiling during play.

When the ball hits an object that extends into the playing surface above the maximum height of the boards or if the ball has been deflected before leaving the playing surface, the referee shall blow the whistle to stop play. The game shall be restarted with a face-off from a point nearest to where the ball was last touched, unless within a goal area, then at the nearest face-off spot, otherwise:

- ► Free-Hit, except in the last two minutes of a game or the last two minutes of overtime, a minor penalty (2') shall be imposed on the offending team.

g) Play shall not be stopped nor the game delayed for any adjustments to clothing, equipment or skates.

The onus of maintaining clothing shall be upon the player. If adjustments are required the player must retire from the pitch and play shall continue.

No delay shall be permitted for the adjustment of goalkeepers clothing or equipment except where a matter of safety in concerned.

If a repair to a goalkeeper's equipment is required, a maximum period of 5 minutes shall be allowed. The game clock must be stopped during this period. If the repair is not completed within the 5 minutes, the goalkeeper must be changed. If there is no second goalkeeper available, the game will re-start with an additional outfield player. The goalkeeper may replace a player on the pitch once the repairs are completed.

For any infraction of this rule the player or goalkeeper shall be assessed a:

- ► Minor penalty (2')

h) The ball must be kept in motion or be played at all times. If either or both teams refuse to play the ball, the referees will stop play, and the ensuing faceoff will take place at the nearest faceoff spot to where the ball was situated when play was stopped. While changing lines or being shorthanded a player is explicitly allowed to wait behind the net until the line change has been completed or the shorthanded situation has expired.

8.11 Goalkeeper's Rights

8.11.1 A goalkeeper is permitted to stop the ball with any part of the body or equipment.

8.11.2 A goalkeeper's special rights of handling, catching, holding or throwing the ball are restricted to the following areas as described below:

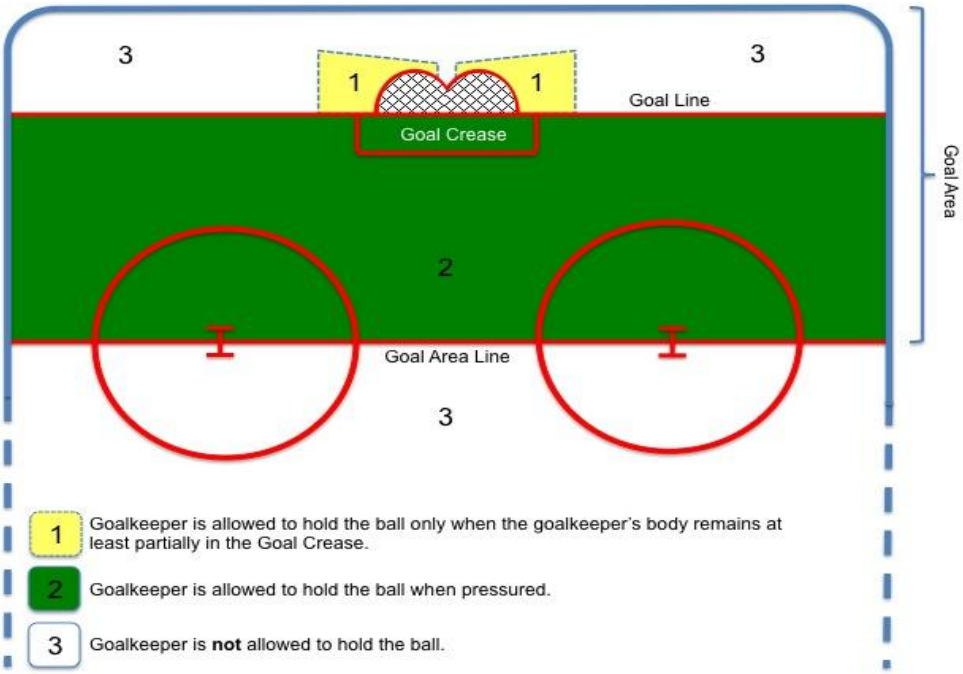

8.11.3 A goalkeeper is allowed to play outside the goal area, but then loses the special rights of handling, catching, holding or throwing the ball.

8.11.4 If a goalkeeper participates in the play in any manner when he is beyond the centre line, the goalkeeper shall be given a:

- **Minor penalty (2')**

8.11.5 A goalkeeper is only allowed to pick up, hold or carry (maximum 2 m) the ball for a maximum of 3 seconds in the area between the Goal Line and Goal Area Line.

INFRINGEMENT: Free-hit, except within the last two minutes of the game or the last two minutes of overtime, then penalty shot.

8.11.6 When a ball is trapped in the goalkeeper's equipment or under the goalkeeper's body or the goalkeeper is being tackled by an opposing player and cannot release the ball, the referee shall blow the whistle within 3 seconds and order a face-off.

8.11.7 A goalkeeper is only allowed to throw the ball along the ground in the area between the Goal Line and Goal Area Line but is permitted to palm down or slap away a ball in any direction.

INFRINGEMENT: Free-hit, except within the last two minutes of the game or the last two minutes of overtime, then penalty shot.

8.11.8 When a game misconduct penalty, match penalty or gross match penalty is given against a goalkeeper and no player is correctly kitted up as a replacement then a maximum period of 10 minutes is allowed for the replacement goalkeeper to be kitted up. During this time the game clock must be stopped (refer to rule 7.9).

8.11.9 No goalkeeper may fall on or pull in the ball against his body or hold or place the ball against any part of the goal or the boards within the area between the Goal Line and the Goal Area Line unless he is being pressured.

INFRINGEMENT: Free-hit, except within the last two minutes of the game or the last two minutes of overtime, then penalty shot.

8.11.10 A goalkeeper is allowed to hold the ball behind the Goal Line only when the goalkeeper's body remains, at least partially, in the goal crease.

INFRINGEMENT: Free-hit, except within the last two minutes of the game or the last two minutes of overtime, then penalty shot.

8.11.11 Unless being pressured, a goalkeeper may not hold the ball for more than three seconds.

INFRINGEMENT: Free-hit, except within the last two minutes of the game or the last two minutes of overtime, then penalty shot.

8.11.12 No goalkeeper may deliberately drop the ball into his pads to cause a stoppage of play.

INFRINGEMENT: Free-hit, except within the last two minutes of the game or the last two minutes of overtime, then penalty shot.

8.12 Goal Crease

8.12.1 Attacking players are not permitted to be in their opponents goal crease unless they are in possession of the ball or the ball is within the goal crease before they enter it.

A player is inside the goal crease if any part of their body or equipment **except the stick** is on or inside the line surrounding the goal crease.

INFRINGEMENT: Free-hit to the non-offending team.

8.12.2 No more than two players from the same team (this may include the goalkeeper) may be within either goal crease at any one time.

INFRINGEMENT: Free-hit. If an opponent is in a real scoring position: penalty shot.

8.13 Scoring a Goal

8.13.1 A goal is scored when the ball is put between the goal posts by the stick of an attacking player, from in front and below the crossbar, and entirely across the goal line drawn on the surface from one goal post to the other with the goal frame in its proper position.

8.13.2 A goal is scored if a defending player puts the ball into the goal in any way. The attacking player who last touched the ball shall be credited with the goal but no assist shall be awarded. For exemptions of this rule, see rules 8.13.3, 8.13.4 and 8.14.4.

8.13.3 If an attacking player deflects the ball into the net, off his skate, equipment or body, in any manner, the goal is allowed. The player who deflected the ball shall be credited with the goal.

A ball that deflects into the net off an attacking player’s skate who does not use a distinct kicking motion is a legitimate goal. A ball that is directed into the net by an attacking player’s skate shall be a legitimate goal as long as no distinct kicking motion is evident. The following should clarify deflections following a kicked ball that enters the goal:

- A kicked ball that deflects off the body of any player of either team (including the goalkeeper) shall be ruled no goal.
- A kicked ball that deflects off the stick of any player (excluding the goalkeeper’s stick) shall be ruled a good goal.
- A goal will be allowed when an attacking player kicks the ball and the ball deflects off his own stick.

8.13.4 Apparent goals shall be disallowed by the Referee for the following reasons:

a) When the ball is directed, batted or thrown into the net by an attacking player other than with a stick. This includes batting or throwing by a hand or foot or any part of the attacking player's body or equipment. A hand gripping a stick shall be deemed part of the stick (see rule 8.14.1).

b) When the ball is kicked using a distinct kicking motion.

A distinct kicking motion is one which the player propels the ball with his skate into the net. If the Referee determines that it was put into the net by an attacking player using a distinct kicking motion, it must be ruled no goal. This would also be true even if the ball, after being kicked, deflects off any other player of either team and then into the net. This is still no goal.

c) When the ball has deflected directly into the net off an official.

d) When a goal is scored and an ineligible player is on the pitch.

e) When an attacking player has interfered with a goalkeeper in his goal crease.

f) When the ball has entered the net after making contact with an attacking player's stick that is above the height of the crossbar. Where the ball makes contact with the stick is the determining factor. If the ball makes contact with the portion of the stick that is at or below the level of the crossbar and enters the goal, this goal is allowed.

g) When a goalkeeper has been pushed into the net together with the ball after making a save. In the event that a goalkeeper has been pushed into the net together with the ball by an attacking player after making a stop, the goal will be disallowed. If applicable, appropriate penalties will be assessed. If, however, in the opinion of the Referee, the attacking player was pushed or otherwise fouled by a defending player causing the goalkeeper to be pushed into the net together with the ball, the goal can be permitted.

h) When the net becomes displaced accidentally. The goal frame is considered to be displaced if either or both goal posts are no longer on the goal line, or the net has come completely off the goal line, prior to or as the ball enters the goal.

i) During the delayed calling of a penalty, the offending team cannot score.

j) When the Referee deems the play has been stopped, even if he had not physically had the opportunity to stop play by blowing his whistle.

k) Any goal scored, other than as covered by the official rules, shall not be allowed.

l) When an attacking player kicks any equipment (stick, glove, helmet, etc.) at the ball causing the ball to cross the goal line.

8.14 Handling the Ball

8.14.1 An outfield player is only allowed to stop the ball with the hand if the ball is played directly to his own stick blade. An outfield player is not allowed to close his hand on the ball.

A hand gripping a stick shall be deemed part of the stick.

INFRINGEMENT: Free-hit unless in a real scoring position – then Penalty Shot (PS).

8.14.2 No player is allowed to pick up or carry the ball by hand.

INFRINGEMENT: Free-hit unless in a real scoring position – then Penalty Shot (PS).

8.14.3 No defending player may pick up the ball with his hands from the playing surface, close his hands on the ball or play the ball with his hands in his own goal crease other than what is allowed from 8.14.1.

INFRINGEMENT: Penalty Shot (PS); if the goalkeeper is not in the goal crease: Goal

8.14.4 A ball may be kicked, touched or stopped using the skates (except while lying on the pitch; rule 8.8.1). Kicking the ball is permitted in both zones. An attacking player who uses a distinct kicking motion to propel the ball into the net with his skate/foot cannot score a goal. An attacking player who kicks a ball that deflects into the net off any player, goalkeeper or official cannot score a goal (see rule 8.13.4).

8.15 Leaving the players Bench / Entering the pitch

8.15.1 No player or team official may leave the players bench at any time when there is a dispute on the pitch.

INFRINGEMENT: Misconduct penalty (10'; yellow card).

8.15.2 No team official or any other persons except players shall go onto the pitch at any time during a game without the permission of the referee.

If a team official goes on to the pitch without prior permission of the referee, he shall on the first occasion receive a warning from the referee to leave the pitch. On refusal or the second or subsequent occasion, he/she shall receive a match penalty (MP; red card).

If a spectator or other person goes on to the pitch without prior permission from the referee they shall be immediately expelled from the venue.

In all cases, a report written by the referees will be submitted to the proper authority.

8.16 Misconduct

8.16.1 No player may use obscene or abusive language at any player or official.

8.16.2 No player may use obscene gestures on the pitch, in the players' benches or in the penalty box at any time.

8.16.3 No player may dispute or resist any decision or instruction given by a referee or other official.

8.16.4 No player may prevent or attempt to prevent a referee or another official from carrying out his/her duties.

8.16.5 No player may incite another player to commit any offence.

8.16.6 No player may commit any other form of misconduct prejudicial to the spirit of good sportsmanship.

8.16.7 No player or any part of their body or equipment may be within the referees' crease when the clock is stopped.

8.16.8 No player shall deliberately hit the ball out of reach of an official who is trying to retrieve it.

8.16.9 No player shall strike the boards or goal cage with his stick or other equipment at any time.

8.16.10 No player shall throw any equipment either on the pitch or out of the playing area at any time.

INFRINGEMENT of rules 8.16.1 to 8.16.10:

Minor penalty (2')

Misconduct penalty (10'; yellow card) or in severe cases game misconduct penalty (GM), match penalty (MP; red card) or gross match penalty (GMP; black card)

In cases where a player on the players' bench committing an offence according to rules 8.16.1 to 8.16.10 cannot be

clearly identified by the referees a bench penalty (2') will be imposed on the offending team.

In general, participants displaying this type of behaviour are assessed a minor penalty, then a misconduct penalty, then a game misconduct penalty, then a match penalty/gross match penalty if they persist.

8.16.11 No player may spit at any person.

INFRINGEMENT: Match penalty (MP; red card).

8.16.12 No player or team official may engage in violent behaviour.

INFRINGEMENT: Match penalty (MP; red card) or gross match penalty (GMP; black card) on offending players or team officials.

8.16.13 No person on the players' bench shall deliberately interfere with the game in progress in any form. That includes deliberately catching, stopping or deflecting the ball or touching, holding, grabbing or tripping an opposing player.

INFRINGEMENT: If the offender is a player and can be identified: Minor Penalty (2') for Interference against the offending player.

If the offender is a bench official or in cases where an offender cannot be clearly identified: Bench penalty (2').

8.17 Team Official / Bench Official

8.17.1 No team official or bench official may:

- Use obscene or abusive language or make obscene gestures to any player or official,
- Dispute or resist any decision or instruction given by a referee or other official,
- Prevent or attempt to prevent a referee or another game official from carrying out the official's duties,
- Incite a player to commit an offence,
- Commit any other form of action prejudicial to the spirit of good sportsmanship.

INFRINGEMENT: A bench penalty shall be imposed on the offending team.

In Severe cases: game misconduct (GM), match penalty (MP; red card) or gross match penalty (GMP; black card) on the bench official in addition to bench penalty.

8.18 Refusing to Start

8.18.1 If a team does not arrive completely kitted up on time within 15 minutes of the scheduled start of a match (5 minutes at tournaments) or declines to start the match, the match will not take place.

The match will be regarded as non-participation by the offending team and penalties under the disciplinary regulations of the National Member Association will apply for domestic games and the IISHF disciplinary regulations for international games, tournaments and events. Two points and a score of 5 – 0 will be awarded to the non-offending team.

8.18.2 If when both teams are on the pitch, one team shall refuse to play when ordered to do so by the referee, the referee shall warn the captain and allow the team 30 seconds in which to begin the game or resume play.

If the offending team fails to re-start the play within these 30 seconds, the captain shall be given a misconduct penalty (10'; yellow card).

Should there be a reoccurrence of the same incident the referee will award the game to the non-offending team and they shall gain 2 points.

The score will be as follows:

- The non-offending team shall keep their score + 5 goals,
- The offending team shall have a score of 0.

The case shall be referred to the proper authorities.

8.18.3 If a match cannot be continued because of unforeseen circumstances, the referee shall stop the game. If it is not possible to rectify the problems within 30 minutes of the stoppage, the game shall be terminated. The case must be referred to the proper authorities that will decide the result of the game.

8.18.4 Both teams participating in the game must be ready to enter the pitch at the official start of the game.

INFRINGEMENT: Bench penalty (2') on the offending team.

8.19 Restart after Stoppage

8.19.1 After any stoppage, the re-start of a game shall be by means of a face-off except where the referee has given a free-hit or a penalty shot as the stoppage was called.

8.19.2 Both teams must be ready at the face-off spot when called by the referees. There must be no undue delay by either team on a face-off:

INFRINGEMENT: In the first instance the referee shall issue a verbal warning to the captain of the offending team.

On the second and subsequent occasions a bench penalty (2') shall be imposed on the offending team.

8.19.3 If a team has more than one change of players on the pitch during a stoppage of play it shall be assessed a:

8.19.4 Both teams participating in the game must be on the pitch for each restart of the game after the break.

INFRINGEMENT: Bench penalty (2') on the offending team.

8.20 Line Change Procedure

8.20.1 When play has been stopped by the referees, both teams may initiate a line change unless a dispute is occurring on the pitch (see rule 8.15.1). During the stoppage, one referee shall oversee and control the line changes for both teams.

8.20.2 Each team is permitted one line change per stoppage of play. If a team makes more than one change of players during the same stoppage, the following sanction shall apply:

INFRINGEMENT: Bench penalty (2')

8.20.3 The line change procedure must not exceed ten (10) seconds. The supervising referee shall determine compliance with this time limit at their discretion and ensure that the procedure is carried out promptly and without unnecessary delay.

To indicate the upcoming end of the line change procedure, the supervising referee will raise one hand. When the referee lowers their hand, no further substitutions are permitted. Both teams must then proceed immediately to the face-off spot (see rule 8.19.2),

INFRINGEMENT: **In the first instance the referee shall issue a verbal warning to the captain/coach of the offending team.**

On the second and subsequent occasions a bench penalty (2') shall be imposed on the offending team.

8.21 Substitution of Players

8.21.1 Players may change at any time from the player's bench. There will be an allowance of **2 m** on the pitch for substitution from the bench. This area will be **2 m** out into the pitch from the team bench and continue the full length of the bench.

8.21.2 If the game is stopped, incoming substitutes may be on the pitch before the players going off have reached the players bench or substitution area without penalty. Substitutions must be initiated before the line change procedure ended (see rule 8.20)

8.21.3 If the game is running, incoming substitutes must not come on to the pitch until at least one foot of the player they are replacing is in the substitution area.

Incoming and outgoing players in the substitution area must not take an active part in the game until the substitution is complete. If they do, they become liable for an illegal substitution of players. Players must always substitute out of and into their own bench area.

INFRINGEMENT: **Minor penalty (2') on incoming player.**

In the last two minutes of the game or the last two minutes of overtime: Penalty shot in addition to the minor penalty.

8.21.4 If several illegal substitutions occur at the same time, only the first illegal substitution will be given a penalty.

8.22 Winner of a Game

8.22.1 The team that at the end of a game has scored more goals than the other team is the winner of the game.

8.22.2 All games shall be awarded as follows:

- Decided games: The winner receives 2 points. The loser receives 0 points.
- Tied Games: each team receives 1 point.

The result of the game shall show the goals scored by each team and the goals scored against them.

8.23 Tied Games and Tied Places

8.23.1 If at the end of the regular time for a game the score of both teams is equal, the game shall be finished and called a draw.

8.23.2 If a game requires a decision (winner) extra time according to 8.25.1 (if not fixed otherwise by IISHF) must be played. If after the end of extra time the score of both teams shall still be equal, a penalty shoot-out must be played.

8.23.3 If teams are equal after all games have been played in the first rounds of a tournament, then the ranking will be determined by:

- Head-to-head-results,
- Goal difference of the head-to-head-games,
- Goals "for" of the head-to-head-games,
- Goal difference of all games,
- Goals "for" of all games,
- Total penalty time of all games,

- If both teams (in the case that only 2 teams are equal) are on the pitch, then a penalty shootout will take place, if not, a coin will be tossed to determine which team will take which place.

8.24 Penalty Shootout

Please see rule 7.12 for details on a penalty shot.

8.24.1 In a penalty shootout each team will select 5 players, in the order in which they will take their shots, and 1 goalkeeper. In the event of an injury or penalty a substitute player can be used. Players who are still serving a penalty are excluded. If a team is not able to select 5 different players for a penalty shoot-out due to the number of remaining players at the end of the final period, the team must select as many players as needed who will take a second (or third) penalty shot to allow for 5 penalty shots in total. The penalty shots must still be taken in alternating sequence so that no player will shoot more than one penalty shot in a row.

8.24.2 If a team does not have at least one fully kitted goalkeeper available, the team is given a maximum of 10 minutes to kit up one of their outfield players. If the team refuses to kit up a player or if the team refuses to put a goalkeeper in the goal, this will be considered as refusing to continue the game (8.18.2).

8.24.3 All 10 shots (5 per team) in the penalty shootout will be taken unless there is a winner. The shots will be taken in alternate sequence. The team to take the first shot will be decided by the drawing of lots by the captains.

8.24.4 If at the conclusion of the penalty shootout, there is still no winner, the penalty shoot-out will be continued in the same sequence as in the initial sequence, until one player fails to score when his opponent has scored.

8.24.5 Penalties against the goalkeeper that are signalled during the execution of a penalty shot will be dealt with according to rule 7.12.8 with the exception that the captain of the offending team has to appoint a player to serve the penalty from the list of selected players that take part in the penalty shootout. The player serving the penalty has to go to the penalty bench and has to stay there until the end of the penalty shootout. The offending team must nominate a substitution.

8.24.6 If a penalty is signalled against the outfield player taking the penalty shot, the referees cancel the penalty shot immediately. The offending player has to go to the penalty bench and has to stay there until the end of the penalty shootout. The offending team must nominate a substitution.

8.25 Time

8.25.1 The nominal duration of games in the different age groups is:

Age Group	Full Games	Overtime (full games)	Break (full games)	Tournament Games
Senior (Women/Men)	3 x 20 Min.	2 x 10 Min.	10 Min.	min. 2 x 10 Min.
Masters (Women/Men)	3 x 20 Min.	2 x 10 Min.	10 Min.	min. 2 x 10 Min.
Veterans (Women/Men)	3 x 20 Min.	2 x 10 Min.	10 Min.	min. 2 x 10 Min.
U-19 (Junior)	3 x 20 Min.	2 x 10 Min.	10 Min.	min. 2 x 10 Min.
U-16 (Youth)	3 x 15 Min.	2 x 5 Min.	10 Min.	min. 2 x 8 Min.
U-13 (Pee-Wee)	3 x 15 Min.	2 x 5 Min.	10 Min.	min. 2 x 8 Min.
U-10 (Minnow)	3 x 12 Min.	2 x 5 Min.	10 Min.	min. 2 x 8 Min.

8.25.2 The duration of games for international Class A events will be decided by the IISHF.

8.25.3 The host National Member Association will decide the duration of games for international Class B events but cannot be less than 60 minutes playing time per team per day.

8.25.4 For international Class A events the IISHF shall decide on the running time of the games. For international Class B events the host National Member Association shall decide on the running time of the games. For national games the National Member Association shall decide on the running time of the games.

8.25.5 When the game clock is running in **real time** then the clock shall be started when the whistle is blown to signal a face-off or when a free-hit should be taken. At all other times, when the referee blows the whistle, the clock shall be stopped.

8.25.6 If the game clock is running in **continuous time** then the clock shall be started when the whistle is blown to signal the first face-off and shall run continuously except where the referee signals for it to be stopped (for exception see rule 8.25.9).

8.25.7 The referee shall only signal for the time clock to be stopped if one of the following occurs:

- A player is injured,
- The ball goes over the boards and the game cannot be restarted immediately,
- The ball becomes unplayable due to becoming lodged in surrounding equipment,
- The referees need to confer with each other or another official,
- When a time penalty or penalty shot is given,
- In an emergency

8.25.8 In the last 2 minutes of a game or in overtime the game clock must be stopped when the referee blows the whistle for a stoppage in play.

8.25.9 When at least one minor or major penalty (this includes major penalties as a direct consequence of a match or gross match penalty) is being served, the game clock must be stopped when the referee blows the whistle for a stoppage in play including when a goal is scored.

If there are no penalties or only misconduct penalties being served the game clock will be operated as required by rules 8.25.5 or 8.25.6 for this game.

8.25.10 If an incident occurs that requires the referees to stop the game at any point after at least two thirds of the nominal playing time of a period, except for the last period, and it is likely that the reason for the stoppage requires more time (e.g. player injury, damages to the venue or game equipment etc.), the referees may call for an early break. It is solely at the discretion of the referees to call for an early break. Rule 8.25.11 will apply accordingly and the duration of the break will be the same as for a regular break.

The remaining playing time will be added to the next period. Therefore, this rule only applies to periods other than the last period of a game.

The teams will continue the game after an early break on the same ends they were on in the previous period. As soon as the remaining time from the previous period has elapsed, the referees will call for a stoppage of play. The game will be restarted immediately with a centre point face off and teams have to change ends according to rule 6.1.2.

8.25.11 All players shall leave the pitch immediately at the end of each period. They shall return promptly to the player's bench when given 2 minutes warning by the timekeeper.

8.25.12 At the conclusion of the game, all players will shake hands with each other. Failure to comply will result in the referees writing a report to the proper authorities for possible action to be taken. The captain of each team will shake hands with the referees. Failure to comply will result in possible disciplinary actions.

8.25.13 There must be a minimum pause of 10 minutes between games of the same team.

8.25.14 There must be a game allowance time (for the game to be played) per game of game time plus 50%.

8.25.15 In games of less than 30 minutes all time penalties shall be reduced by 50%.

8.25.16 When a penalty shot is being taken the game clock must remain stopped.

8.26 Time-Out

8.26.1 During the progress of each period of a game (including overtime but not in a penalty shootout) the captain of each team shall be permitted to ask the referee for a time-out of 30 seconds duration. The request can only be made during a stoppage in play before the line change procedure ended (see rule 8.20).

8.26.2 The referee, when requested correctly by the captain, shall immediately signal to stop the clock and inform the timekeeper, which team has taken the time-out.

8.26.3 The timekeeper must signal the referee when the 30 seconds duration has expired.

8.26.4 The referee will restart the game in the same way as the game would have been continued before the time-out.

8.26.5 At all tournaments, except international title events, the rule 8.26.1 can be waived with the permission of the National Member Association.

8.27 Whistle

8.27.1 When a referee blows the whistle to indicate that play should start with a face-off, free-hit or a penalty shot, the players shall start play immediately.

8.27.2 When a referee blows the whistle on any occasion, other than under rule 8.27.1 all players shall stop play immediately.

INFRINGEMENT: Misconduct penalty (10'; yellow card)

8.28 Injuries

8.28.1 If it is obvious that a player has sustained a serious injury, the referees shall stop the play immediately.

8.28.2 If a player is injured and cannot continue to play or go to the bench, the play shall continue until his team has secured possession of the ball, unless any team is in an immediate scoring position.

8.28.3 If a referee has to stop the game because of an injured player, then the injured player must go to the player's bench. The player cannot remain on the pitch for the re-start of the game.

An injured player who refuses to leave the pitch shall be assessed a:

INFRINGEMENT: Minor penalty (2')

8.28.4 If a penalized player has been injured he may proceed to the dressing room, and if he has been assessed a penalty requiring a player to be put on the penalty box, the penalized team shall immediately put a substitute player in the penalty box who shall serve the penalty without change, except by the injured penalized player if he is able to return.

8.28.5 The injured penalized player shall not be eligible to play until his penalty has expired.

INFRINGEMENT: Game misconduct penalty (GM)

8.28.6 If a goalkeeper sustains an injury or becomes ill, he shall be ready to resume play immediately or be replaced by a substitute goalkeeper at the discretion of the referee.

8.28.7 If both goalkeepers of the team are incapacitated and unable to play or if the team does not have a substitute goalkeeper, the team shall have **ten minutes** to dress another player in uniform as a goalkeeper.

8.28.8 When a goalkeeper is hit in the face or head, especially from a **hard shot**, and the goalkeeper appears to be impaired by the hit or if there is any indication of a serious injury, the referee shall stop play immediately unless there is an instant scoring opportunity.

8.29 Blood

8.29.1 Any player who is bleeding must be ordered off the pitch by the referee immediately when the bleeding is noticed. A substitute player may come on to the pitch immediately. The wounded player may not return to the pitch until the bleeding is satisfactorily stopped.

INFRINGEMENT: Game misconduct penalty (GM)

8.29.2 Any blood spillage onto the pitch must be removed in accordance with national laws. In addition, any pieces of kit or items of clothing must be changed. The referees must specify the piece of equipment or clothing that must be changed. The player must not return to the pitch without changing the required clothing.

INFRINGEMENT: Game Misconduct penalty (GM)

8.30 Doping and Alcohol

8.30.1 The sport of Inline Skater Hockey is subjected to actively battle doping, the use of any illegal substances and the abuse of alcohol. Therefore the World Anti-Doping Code 2009 published by the World Anti-Doping Agency and being in effect as of January 1, 2009 is an integral part of the “IISHF Official Rule Book” including all corresponding implementation rules, annotations and standards in their respective most current version.

8.30.2 Any player, team official or game official who has obviously and evidently in the opinion of the referees and/or Tournament Director, consumed alcohol or narcotic substances.

- before or during a game
- at tournament events between the manager’s meeting and the team’s last game on the first day of the event
- at tournament events between the team’s first and last game of the day on any subsequent days of the event if applicable
- at tournament events between the team’s first game and the presentation ceremony on the last day of the event

will be banned from participating in a game or the remainder of the event by the Tournament Director of the event or the referees. Additional penalties will be imposed by the National Member Association for domestic games and the IISHF for international games.

8.30.3 Any player, team official or game official must, if requested by a National Member Association or IISHF official, submit to a drug test or an alcohol control test. Failure to do so will be taken as if a positive result has been obtained and will be dealt with accordingly.

9. Referee Signals

9.1 Referee Signals

9.1.1 Referee's signals must be used in all matches so that they are clearly visible to game officials, players and spectators.

9.1.2 The official referee signals are:

Face-off
Both forearms with outstretched hands swinging past the eyes into a horizontal position showing the point from which the face-off shall be taken, the upper arms kept close to the body.

Free-hit
One arm vertical, one arm horizontal pointing in the direction the Free-hit it to be taken.

No Goal / No penalty / Play On
Both arms extended outwards horizontally

Goal Scored
One arm extended outwards pointing clearly at the goal scored...

Time-Out / Stop The Clock
Using both hands to form a T in front of the chest.

Penalty Shot
Both arms extended fully above the head with wrists crossed.

Delayed Call of Penalty
Extended arm raised fully above the head

Minor penalty (2’)
One arm vertical, two fingers extended to indicate two minutes, followed by the signal for the relevant penalty.

Bench penalty (2P)
Putting the hands to the hip.

Major penalty (5’)
One arm vertical, five fingers extended to indicate five minutes followed by the signal for the relevant penalty.

Misconduct penalty (10’; yellow card)
One arm vertical holding a yellow card.

Game Misconduct (GM; yellow and red card)
One arm vertical holding a yellow and red card at the same time.

Match penalty (MP; red card)
One arm vertical holding a red card.

Gross match penalty (GMP; black card)
One arm vertical holding a black card.

Interference (A)
Arms crossed in front of chest with clenched fists.

Charging (B)
Arms in front of body with clenched fists, rotating in a circular motion forwards.

Fighting/Roughing (C)
Arm extended out in front of body with clenched fist.

Cross Checking (D)
A forward motion with both fists clenched in front of the chest.

Holding (E)
One hand clasping the wrist of the other arm with arms extended out in front of the body.

Spearing (F)
A forward motion with both fists clenched in front of the chest, one hand behind the other using a poking motion.

Slashing (G)
One arm extended forward in front of the body and a cutting motion with the other hand on to the wrist.

Tripping (H)
A slashing motion with the hand across the lower thigh/knee.

Hooking (I)
A tugging motion with both hands clenched towards the body.

High Sticking (J)
Holding both fists clenched one immediately above the other at the height of the shoulder.

Elbowing (K)
One arm raised, bent at the elbow with the hand behind the ear and the elbow pointed outwards, with the other hand clearly tapping the elbow.

Checking From Behind (L)
Both arms straight out in front of body, palms up.

Boarding (M)
Striking a clenched fist of one hand into the open palm of the opposite hand in front of the chest.

Butt-Ending (N)
A cross motion of the forearms, one moving under the other. Upper hand is open and the lower hand a clenched fist.

Kneeing (O)
Tapping either knee with the palm of the hand, while keeping both skates on the pitch.

Head-Butting (P)
No sign

Checking to the Head and Neck Area (Q)
A side movement of the open palm of the hand towards the side of the head.

Kicking (R)
No sign

Too many players Illegal Substitution (W)
Showing with one hand five fingers and with the other hand one finger.

Diving (S)
Misconduct (ZA)
Putting the hands to the hip.

10. Foul Play – Overview

10.1 Fouls and their Penalization

Foul Play (Rule)		Penalty	Code
INTERFERENCE (8.10.1)	On player – a)	2’	A
	On goalkeeper – b)	2’	
CHARGING (8.10.2)	a)	2’ or 5’	B
	with injury – b)	5’ or 5’+GM or MP or GMP	
FIGHTING/ROUGHING (8.10.3)	Unnecessary roughness – a)	2’ or 5’ or 5’+GM	C
	Grabbing or pulling mask or hair – b)	5’ or 5’+GM	
	Gloves off – c)	10’	
	Fight instigator – d)	MP or GMP	
	Retaliating/defending – e)	2’ or 5’ or 5’+GM	
	“3rd man in” – intervention – f)	5’+GM	
CROSS-CHECKING (8.10.4)	a)	2’ or 5’	D
	With injury – b)	5’ or 5’+GM or MP or GMP	
HOLDING (8.10.5)	On opponent – a)	2’	E
	On opponent’s stick – b)	2’	
	On break-away - c)	*In addition PS*	
	On break-away with empty net - d)	*In addition GOAL*	
SPEARING (8.10.6)	Attempt – a)	5’	F
	Actual action – b)	5’+GM or MP or GMP	
	With injury – c)	GMP	
SLASHING (8.10.7)	a)	2’ or 5’	G
	With injury – b)	5’ or 5’+GM or MP or GMP	
	Swinging stick in incident – c)	5’+GM or MP or GMP	
	On break-away - d)	*In addition PS*	
	On break-away with empty net - e)	*In addition GOAL*	
TRIPPING (8.10.8)	a)	2’ or 5’	H
	With injury – b)	5’ or 5’+GM or MP or GMP	
	On break-away - c)	*In addition PS*	
	On break-away with empty net - d)	*In addition GOAL*	
HOOKING (8.10.9)	a)	2’ or 5’	I
	With injury – b)	5’ or 5’+GM or MP or GMP	
	On break-away - c)	*In addition PS*	
	On break-away with empty net - d)	*In addition GOAL*	
HIGH STICKING (0)	a)	2’ or 5’	J
	With injury – b)	5’ or 5’+GM or MP or GMP	
ELBOWING (8.10.11)	a)	2’ or 5’	K
	With injury – b)	5’ or 5’+GM or MP or GMP	
CHECKING FROM BEHIND (8.10.12)	Body check – a)	5’	L
	With injury – b)	5’+GM or MP or GMP	

BOARDING (8.10.13)	a)	2’ or 5’	M
	With injury – b)	5’ or 5’+GM or MP or GMP	
BUTT-ENDING (8.10.14)	Attempt – a)	5’	N
	Actual action – b)	5’+GM or MP or GMP	
	With injury – c)	GMP	
KNEEING (8.10.15)	a)	5’	O
	With injury – b)	5’+GM or MP or GMP	
HEAD-BUTTING (8.10.16)	Attempt – a)	MP	P
	Actual action – b)	GMP	
CHECKING TO THE HEAD AND NECK AREA (8.10.17)	a)	5’	Q
	With injury – b)	5’+GM or MP or GMP	
KICKING (8.10.18)	a)	GMP	R
	b)	GMP	
DIVING (8.10.19)		2’	S

The following abbreviations are used: 2’ – minor penalty, 5’ – major penalty, 10’ – misconduct penalty, GM –game misconduct penalty, MP – match penalty “red card”, GMP – gross match penalty “black card”, PS – penalty shot, GOAL – goal awarded

11. Penalty Codes – Overview

11.1 Foul Play

Offence	Rule	Code
Interference	8.10.1	A
Charging	8.10.2	B
Fighting/Roughing	8.10.3	C
Cross-Checking	8.10.4	D
Holding	8.10.5	E
Spearing	8.10.6	F
Slashing	8.10.7	G
Tripping	8.10.8	H
Hooking	8.10.9	I
High Sticking	8.10.10	J
Elbowing	8.10.11	K
Checking from Behind	8.10.12	L
Boarding	8.10.13	M
Butt-Ending	8.10.14	N
Kneeing	8.10.15	O
Head-Butting	8.10.16	P
Checking to Head and Neck Area	8.10.17	Q
Kicking	8.10.18	R
Diving	8.10.19	S

11.2 Substituting players

Offence	Rule	Code
Too many players on pitch	4.2.13	W
Illegal substitution	8.21.3	

11.3 Delaying of game

Offence	Rule	Code
Face-Off offences (2nd and subsequent offences)	6.1	X
Not obeying free-hit distance	7.1.5	
Shooting/hitting/throwing ball over boards or at the ceiling	8.10.20 f)	
Displacing goal cage (own goal)	8.10.20 c)	
Displacing goal cage (opposing goal)	8.10.20 e)	
Refusing to start playing (1st offence after verbal warning)	8.18.2	
Delaying face-off	8.19.2	
More than one line change during stoppage of play	8.19.3	
Delaying the restart of the game after a period break	8.19.4	

11.4 Goalkeeper offences

Offence	Rule	Code
Goalkeeper participating in play beyond centre line	8.11.4	Y

Goalkeeper leaving crease too early on penalty shot (2nd offence)	7.12.6	
Goalkeeper advancing beyond goal area line on penalty shot (2nd offence)	7.12.7	

11.5 Misconduct

Offence	Rule	Code
Entering official's dressing room unauthorized	1.9.3	ZA
Player intervening with the referees or officials	3.9.1	
Throwing stick or other object at ball or opposing player	8.6.1	
Leaving players bench when dispute on the pitch	8.15.1	
Engaging in violent behaviour	8.16.12	
Team official entering pitch without prior permission	8.15.2	
Misconduct	8.16.1 – 8.16.10	
Spitting	8.16.11	
Physical abuse of a game official (referee)	3.9.2	
Interfering with the game in progress from the player's bench	8.16.13	
Misconduct by team/bench official	8.17.1	
Not stopping to play after referee whistle	8.27.2	
Entering pitch / staying on pitch with bleeding wound	8.29.1	
Failing to change blood spilled clothing/equipment	8.29.2	

11.6 Penalty box offences

Offence	Rule	Code
Not leaving penalty box directly onto the pitch	7.11.1	ZB
Not returning to penalty box after period break or time-out	7.11.2	
Leaving penalty box prior to termination/end of penalty	7.11.3	
Misbehaving in the penalty box	7.11.4	
Leaving penalty box when dispute on the pitch	7.11.5	
Removing jersey in penalty box	7.11.6	

11.7 Equipment related offences

Offence	Rule	Code
Illegal equipment (2nd and subsequent offences)	5.1.8	ZC
Playing without helmet properly fastened	5.5.3	
Playing without gloves	5.7.2	
Outfield player playing with broken stick	8.4.1	
Goalkeeper playing with broken stick	8.4.2	
Throwing new stick to player without stick	8.4.3	
Playing with a stick having been thrown onto the pitch	8.4.4	
Obtaining a second stick when having stick dropped	8.5.1	

12. Your Notes